ADAMATIC®

ADR-2 DIVIDER / ROUNDER

WWW.ADAMATIC.COM • INFO@ADAMATIC.COM • 206.322.5474 / 800.578.2547 TOLL FREE
PART OF BELSHAW ADAMATIC BAKERY GROUP • 814 44TH STREET NW, SUITE 103, AUBURN, WA 98001 USA

ADAMATIC®

ADR-2 DIVIDER/ROUNDER

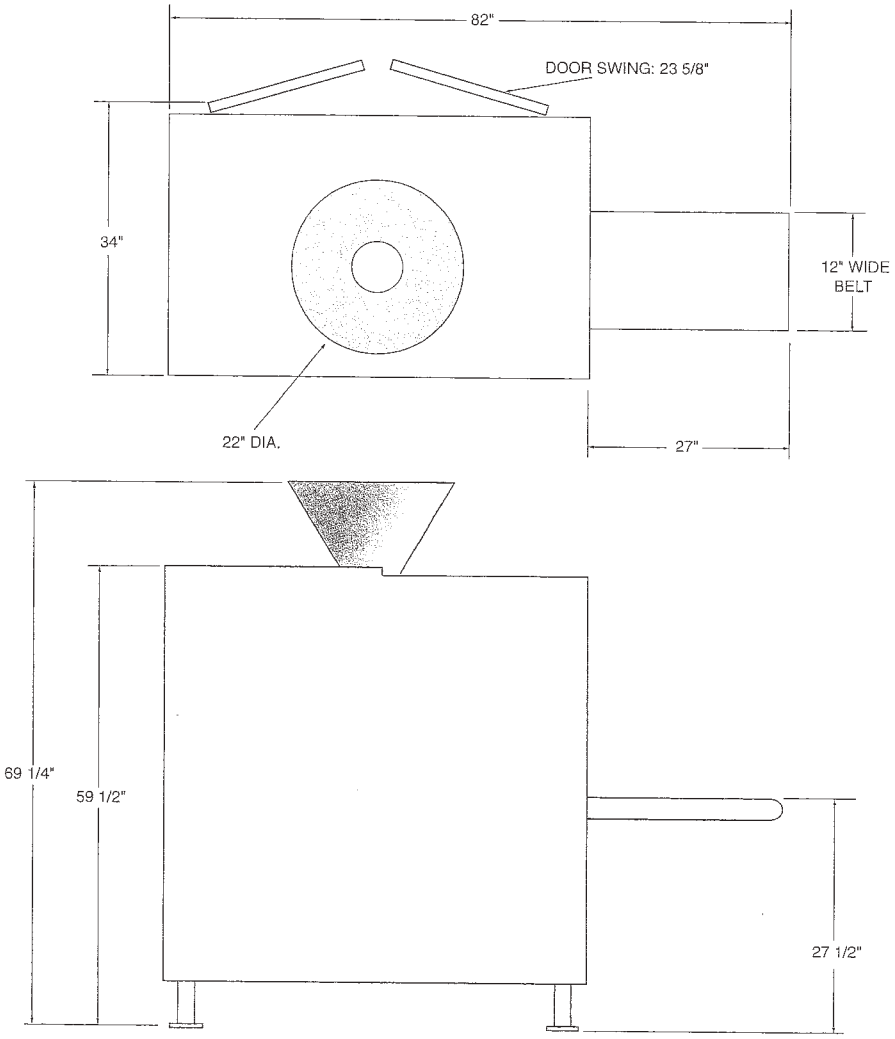

Extremely accurate scaling and rounding.
Production speeds up to 4,800 pieces per hour.

STANDARD FEATURES:

- Speeds up to 40 strokes per minute.
- Fully adjustable hydraulic main piston, assuring accurate scaling with minimal dough punishment.
- Mechanical variable speed and rounding control.
- Stainless steel covers... electrically interlocked for safety.
- Adjustable gravity feed oiling system.
- Flour duster.
- Simple weight adjustment.
- BISSC approved. Easy to clean and maintain.
- UL listed control panel.
- ADR tool group.

DIVIDING RANGES:

- 1 pocket: (bread) 10 to 19 oz (280 to 532 gr).
- 2 pocket: (bread & rolls) 1 to 8 oz (28 to 224 gr).
- 3 pocket: (rolls) 1 to 3 oz (28 to 84 gr).

OPTIONAL EQUIPMENT:

- Digital total stroke counter.

SPECIFICATIONS:

- Electrical - 220/60/3 (other voltages available).
- Total amps - 20 at 220 volts.
- Shipping weight - 2,150 lb.

Scaling and production weights may vary with different dough consistencies.

WWW.ADAMATIC.COM • INFO@ADAMATIC.COM • 206.322.5474 / 800.578.2547 TOLL FREE
PART OF BELSHAW ADAMATIC BAKERY GROUP • 814 44TH STREET NW, SUITE 103, AUBURN, WA 98001 USA

ADAMATIC®

ADR-2C

INTRODUCTION

1.1 The following instructions have been carefully prepared to assist you in installing and operating the ADAMATIC 2 POCKET DIVIDER/ROUNDER SYSTEM. The drawings and diagrams shown illustrate the arrangement and installation for this equipment only. The information and suggestions have been prepared to assist you in obtaining the most satisfactory performance, and also to guide you in giving it the reasonable attention and care that any fine equipment deserves.

1.2 ADAMATIC recommends that the instruction and applicable safety precautions be fully understood by all personnel responsible for the ADR-2C SYSTEM operation and/or maintenance.

WARNING!

Failure to follow the recommendations of this manual can result in potential hazards to personnel and property.

INSPECTION

3.1 Check the parts received with the shipping lists; report any shortages.

3.2 Immediately after unpacking the Divider Rounder, check for possible shipping damages. If this unit is found to be damaged after unpacking material, contact the carrier within 15 days of delivery.

3.3 Contact the Adamatic Service Department at (732)-544-8400.

ADAMATIC®

MODEL ADR-2C
2 Pocket Divider/Rounder

INSTALLATION

When installing a new machine, careful attention should be paid to the following points:

1. Ensure that the machine is level and stable.

2. Remove all covers and check for any obvious damage that may have occurred during transit. Any hidden damage must be reported to the delivering carrier without delay.

3. Wipe the working surfaces with a clean cloth to remove all traces of preservative, which is applied by the manufacturer to protection during transit.

4. Before initial startup, coat the main plunger, main plunger chamber and back pocket slides with specified mineral oil, as it will take the automatic lubricator a few minutes to initially distribute oil to the working surfaces.

OPERATION

Procedures, which entail dismantling any part of the machine, should not be undertaken until it is ensured that the main power switch is in the **"OFF"** position.

STARTING PROCEDURES (each run)

The following description covers the full procedure necessary to prepare the machine for each production run, but it will be found that having once achieved a specific result, many of the adjustments will not be necessary for subsequent runs unless a different dough mix is introduced.

1. Check the level of the specified mineral oil in the transparent reservoir and fill if necessary. NOTE: Oil must always completely cover the filter.

2. Select the weight attachment to give the required weight of roll. This will be determined mainly by experience depending upon the type of dough used.

3. Coat the weight attachment with the mineral oil and insert into the back pocket of the machine. Ensure that it is pushed fully up to the stop. Then lock in position with the hexagonal screw. It is important that the screw is fully tightened.

4. Select and fit the outer moulding drum corresponding to the weight and volume of roll being produced. The correct position in which the drum should be keyed will be determined when the machine is running and should then be marked for future use. Tighten the drum in position by means of the large hand-wheel ensuring that the drum is fully seated. There should be no end play on the drum when it is tightened.

5. Tighten the moulding belt with the ratchet handle.

6. Coat the main plunger, main plunger chamber and back pocket slides with the mineral oil.

7. Insert the main plunger into the hopper pocket and connect the main piston connecting road to main piston arm.

8. Coat the inside of the hopper with the mineral oil.

9. Select the weight setting on the handwheel located at the backblock. Turn clockwise to reduce the weight and counter clockwise to increase the weight. Then lock with the thumb screw. Make sure that all covers are on securely and doors are closed.

10. Turn the main switch **"ON"**.

11. Start the machine.

12. If the machine cycles satisfactorily, fill the hopper with dough. The weight control bar should positively touch the stop at the end of the weight adjustment screw. Except with certain difficult or elastic doughs, accurate weights will result when the hydraulic pressure is just high enough for the weight control bar to touch the stop without hammering. If an elastic dough is being used, the pressure may have to be set higher to achieve accurate weight, but care must be taken not to run the machine at needlessly high pressure because of the resultant shock loading on the machine.

13. Check the product weights and adjust if necessary as described in paragraph 12, or, if greater variation is necessary, paragraphs 2 and 12.

14. Observe if the dough pieces drop correctly into the moulding drum. If the pieces fall in front of the holes, slack the moulding belt and move the drum counter clockwise the required amount, and re-engage in the appropriate slot and tighten. Tension the belt. If the pieces fall behind the holes, the drum should be moved clockwise.

15. If more moulding turns are required on the inner moulding drum, the small handwheel below the discharge conveyor should be adjusted. Do not adjust when machine is stationary.

16. The flow of the mineral oil to the main plunger or back pocket slides may be varied by turning the adjustable screws of on/off valves located inside oil container. We recommend approximately on (1) drop of oil per stroke of the machine at each outlet.

WEIGHT RANGES

The following weight attachments and drums are shown against their approximate weight ranges. These may vary according to the baker's dough recipe.

MEASURING PISTON AND LINER ASSEMBLIES

Item #24180 - Piston and liner assembly
1-5 oz. and 9-20 oz.
Item #12637 - Piston and liner assembly #4 ("D")
5 - 8 oz.

MOULDING DRUMS

Item #19121	1-2 oz.
Item #19122	2-3 1/4 oz.
Item #19123	3-6 oz.
Item #19124	5-8 oz.
Item #12675	Up to 20 oz.*

*The "12675" moulding drum is built to order for specific weights (8-20 ozs.). One drum will not handle all dough pieces in that range and it is necessary to design a drum for the exact sealing weight.

LARGE SINGLE PIECE (Maximum 20 oz.)

When producing large single pieces of dough, the following variations in starting procedure should be undertaken:

A. Insert measuring piston "24180" into backblock.
B. Remove the dough chutes from the machine interior.
C. Fit large slotted bread moulding drum "12675".

ADAMATIC®

CLEANING DOWN

BEFORE CLEANING MACHINE **make sure electrical power to machine is disconnected.** These procedures must be carried out after each production run and may possibly be necessary during the run. Clean all components, which contact the product using a damp cloth. Make certain that all hard and glutinous deposits are completely removed to allow free action to the sliding components. When removing components from the machine, do not under any circumstances use undue force, as serious distortion could result.

A. Withdraw pin connecting arm main piston and main plunger arm.

B. Withdraw main plunger from hopper pocket.

C. Thoroughly clean the hopper chamber and plunger.

D. Remove weight attachment. If the plunger and liner are difficult to remove, use the "T" shaped tool provided. This should be screwed into the attachment and then pulled firmly outwards.

E. Clean the weight attachment plunger and liner, then coat with mineral oil.

F. Clean the weight attachment chamber and coat with mineral oil.

G. Clean inner and outer moulding drums.

H. Clean moulding belt.

I. Clean machine framework, etc., of dough, flour and oil.

ADAMATIC®

MODEL ADR-2C
2 POCKET DIVIDER/ROUNDER

PERIODIC MAINTENANCE

New Machine

After an initial running in period of approximately 50 hours, all nuts and screws should be checked for security and tightened. Any looseness is due to the initial bedding down of the machine.

Daily Maintenance

1. **DISCONNECT MAIN POWER!**
2. Fill edible oil tank. (Use edible U.S.P. mineral oil only with viscosity of 340 to 360.) Use of lighter viscosity mineral oil will void warranty)
3. Lubricate plungers and slides with mineral oil.
4. Clean machine thoroughly after use.

Weekly Maintenance

1. **DISCONNECT MAIN POWER**
2. Give one shot of grease to all grease nipples.
3. Check oil level of hydraulic unit and top off if necessary.
4. Lubricate all chain drives with SAE 30 Motor Oil or higher quality machine oil. Sufficient access to the chains may be obtained by removing machine top covers only.

ADAMATIC®

Monthly Maintenance

1. **DISCONNECT MAIN POWER!**
2. Remove the inner moulding drum for cleaning. First remove the outer drum. Then unscrew the two hexagonal nuts withdraw the inner drum complete with the front plate.
3. Give one shot of grease to all grease nipples.
4. Remove the main drive side cover and brush all chain drives with oil. Check the chain drives for correct tension and adjust the tensioner sprockets if necessary.
5. Grease flour duster eccentric (if supplied with machine).
6. Lubricate with oil, all pivot points and bushing bearings.
7. Check all nuts and bolts for tightness.

Hydraulic Unit

The following hydraulic fluids are recommended:

Shell Tellus 32

Bel-Ray Raylene Hydraulic Oil#000-611894

Chevron AW Hydraulic Oil #32

Exxon Nuto-H32

Failure to use recommended oils and/or lubricants voids warranties.

Do not use edible oil or hydraulic brake fluid.

Food grade mineral oil: Bell Ray No Tox Oil 300 - Food grade H-1

MODEL ADR-2C
2 POCKET DIVIDER-ROUNDER

GENERAL SERVICE

It is recommended that the O-rings and hydraulic oil be changed every 2000 hours. Before changing the oil, wash the hydraulic with hot water and dry completely with air.

Troubleshooting

FAULT	PROBABLE CAUSE	REMEDY
Hydraulic unit does not operate or will not reach full pressure and is not filling the measuring pockets at maximum pressure adjustment.	1. Bypass valve not tightened. 2. Leaking check valve, item #14783. 3. Leaking regulator not working, item#13015. 4. Pressure regulator not working, item #13015.	1. Tighten. 2. Dismantle and clean. 3. Dismantle and replace. 4. Dismantle and clean.
Hydraulic unit becomes solid and will not collapse.	Pressure regulator #13015 is sticking.	Dismantle and clean. Replace if necessary.
Machine drive slips.	V-belt worn or stretched.	Replace.
Hydraulic unit leaks through main seal.	1. Worn or damaged seal. 2. Damaged piston rod.	1. Replace seal. 2. Replace cylinder.
Motor stops.	Electrical overload cut out.	Check machine on overloading and mechanical binding. Reset overload.
Machine labors under load.	Binding of main piston and/or measuring piston.	Clean main piston and measuring piston.
Machine will not start.	Electrical circuit is not closed.	Check fuses; check limit switches in door and covers.

ADAMATIC®

FAULT	PROBABLE CAUSE	REMEDY
Dough "strings" from backblock.	1. Lock screw of liner is not fastened. 2. Excessive wear between backblock and hopper surface. 3. Measuring piston does not fully come flush with backblock surface.	1. Tighten correctly 2. Replace knife. 3. Remove shims located between backpocket bearing guide #12606 and hopper. Make sure clearance between hopper and backblock is .002". 4. Adjust lever push-out #15747.
Uneven weights	1. See under "Hydraulic." 2. Machine requires cleaning. 3. Insufficient oil to main piston and backblock. 4. Main plunger leaking air.	1. See under "Hydraulic." 2. Stop machine and clean. 3. Adjust oil flow. See page 3, par. 16. 4. Adjust oil flow. Check for wear.
Rounding section is not working.	V-belt slipping.	Readjust V-belt.

Total Performance Lubricants

Raylene Anti-Wear Hydraulic Fluid Series Dependable Provides Long Service Life and Minimum Wear

This is a group of anti-wear fluids specially designed to meet the requirements of modern, high performance pumps and hydraulic systems. They are blended from premium quality base stocks witch a superb combination of oxidation inhibitors to prevent sludging. and deposit formation. Further, their design includes a high level of wear protection to meet the requirements of all pump manufacturers.

Raylene Anti-Wear Hydraulic Fluids offer superior protection against corrosion and foam and rubber swell, and exhibit excellent water demulsibility characteristics. These are the qualities that are required to assure efficient, trouble-free operation of the new high-pressure hydraulic system. This series is offered in a wide range of viscosities to meet all the requirements of temperature and loads contitions.

To work effectively, the hydraulic fluid must have certain flow characteristics at operating temperatures and at start-up. The general guideline for this is as follows:

Start-up maximum viscosity	400 SUS
Operating minimum viscosity	70 SUS
Operating maximum viscosity	250 SUS

Naturally, these parameters will vary somewhat with the manufacturer and the specific application. However, recommendations based on these limits will perform very well.

Raylene Anti-wear Hydraulic Fluids are premium quality oils witch naturally high resistance to viscosity change with temperature. Their manufacture is carefully checked to assure that they measure up to specification. Finally, before filling, the fluid I filtered through a 10 micron filter to remove all materials that could adversely affect the working parts of the system. It is this careful attention to formulation, manufacture, and control that assures outstanding, dependable performance from Raylene Anti-wear Hydraulic Fluid. For applications with special requirements such as a wide range of operating temperatures, very low start-up temperature, or extremely high operating pressures, we recommend Raylene Anti-Wear Hydraulic Fluid LT series.

ADR 2 MANUALS - NEW STYLE

DRAWINGS INCLUDED:

1. E 13233 (REV. D) (3 SHEETS) MAIN ASSEMBLY
   OPERATOR'S & DRIVE'S SIDES, WITH SPLIT CONVEYOR
2. e 12601A (REV. M) HOPPER W/ BACKPOCKET ASSEMBLY (Item # 8)
3. e 12648 (REV. S) ROUNDING UNIT ASSEMBLY (Item # 10)
4. e 12741 (REV. E) SUB-DRIVE ASSEMBLIES (Item # 12)
5. e 15756 (REV. I) WEIGHT ADJUSTMENT ASSEMBLY (Item # 52)
6. e 18282 (REV. J) VARIBLE SPEED MAIN DRIVE ASSEMBLY (Item # 55)
7. e 17095 (REV. I) CRANKSHAFT & PIVOT ARM ASSEMBLY (Item # 63)
8. E 20211 (REV. G) HYDRAULIC UNIT ASSEMBLY (Item # 81)
   W/ B 18532 - HOSE, HYDRAULIC ASSEMBLY (REV. B)
9. D 24207 (REV. E) RATCHET BELT TENSIONER ASSEMBLY (Item # 83)
10. D625343 (REV. A) FLOUR DUSTER ASSEMBLY, EXTERNAL (Item # 86)
11. e 27856 (REV. H) DUAL CONVEYOR ASSEMBLY (Item # 87)
12. B 618830 (C) ELECTRIC SCHEMATIC

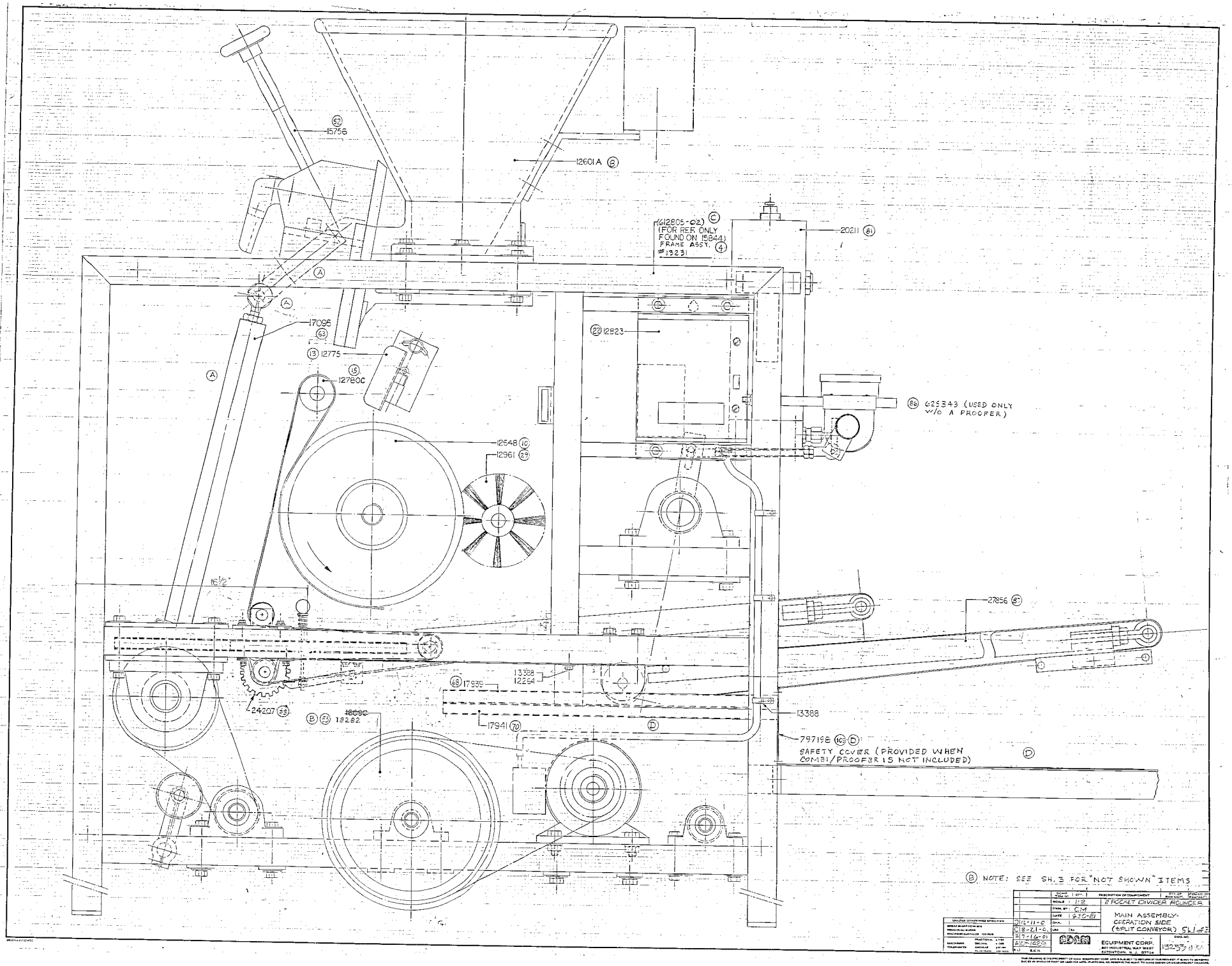
(52) 15756
12601A (8)
(612805-02) (C)
(FOR REF. ONLY
FOUND ON 15844)
FRAME ASSY. (4)
#13231
20211 (61)
17095
(63)
(13) 12775
(15)
12780C
(22) 12823
(86) 625343 (USED ONLY
W/O A PROOFER)
12648 (16)
12961 (29)
16 1/2"
27856 (87)
13388
12264
(68) 17939
24207 (53)
(B) (23) ~~16690~~
18262
17941 (70)
13388
797198 (10) (D)
SAFETY COVER (PROVIDED WHEN
COMBI/PROOFER IS NOT INCLUDED)
(B) NOTE: SEE SH. 3 FOR "NOT SHOWN" ITEMS
SCALE 1:2
2 POCKET DIVIDER ROUNDER
MAIN ASSEMBLY-
OPERATION SIDE
(SPLIT CONVEYOR) SH. 1 OF 3
DATE 1-30-81
DRN. C.M.
EQUIPMENT CORP.
807 INDUSTRIAL WAY WEST
EATONTOWN, N.J. 07724
13253-01 F.

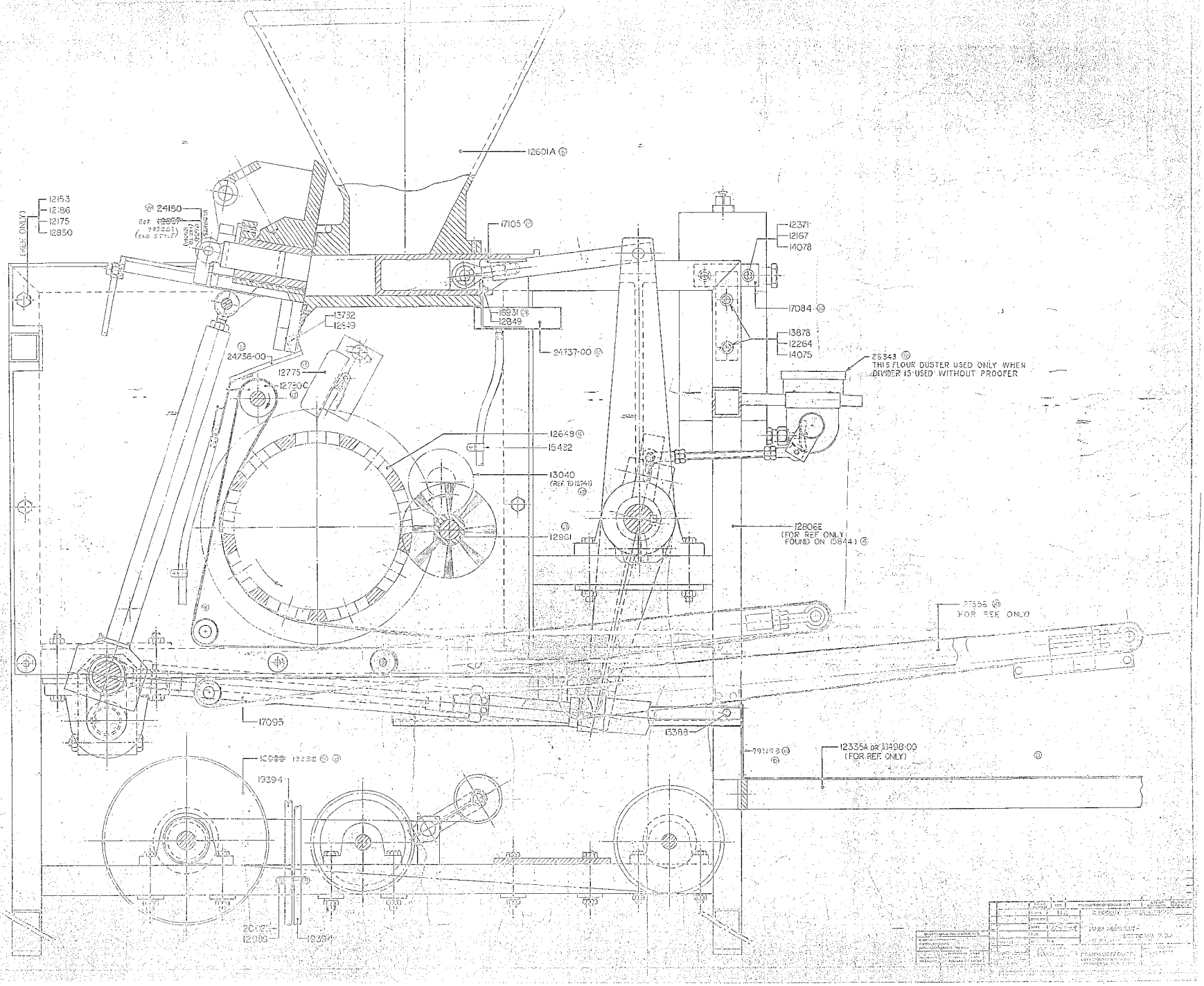
12601A
12153
12186
12175
12850
24160
17105
12371
12167
14078
17084
13732
12849
16931
24737-00
13878
12264
14075
24736-00
12775
12750C
25343
THIS FLOUR DUSTER USED ONLY WHEN DIVIDER IS USED WITHOUT PROOFER
12649
15432
13040
(REF. TO 12741)
12961
12806E
(FOR REF ONLY FOUND ON 15844)
FOR REF ONLY
17095
13388
12335A OR 10498-00
(FOR REF ONLY)
19394
12086
19394

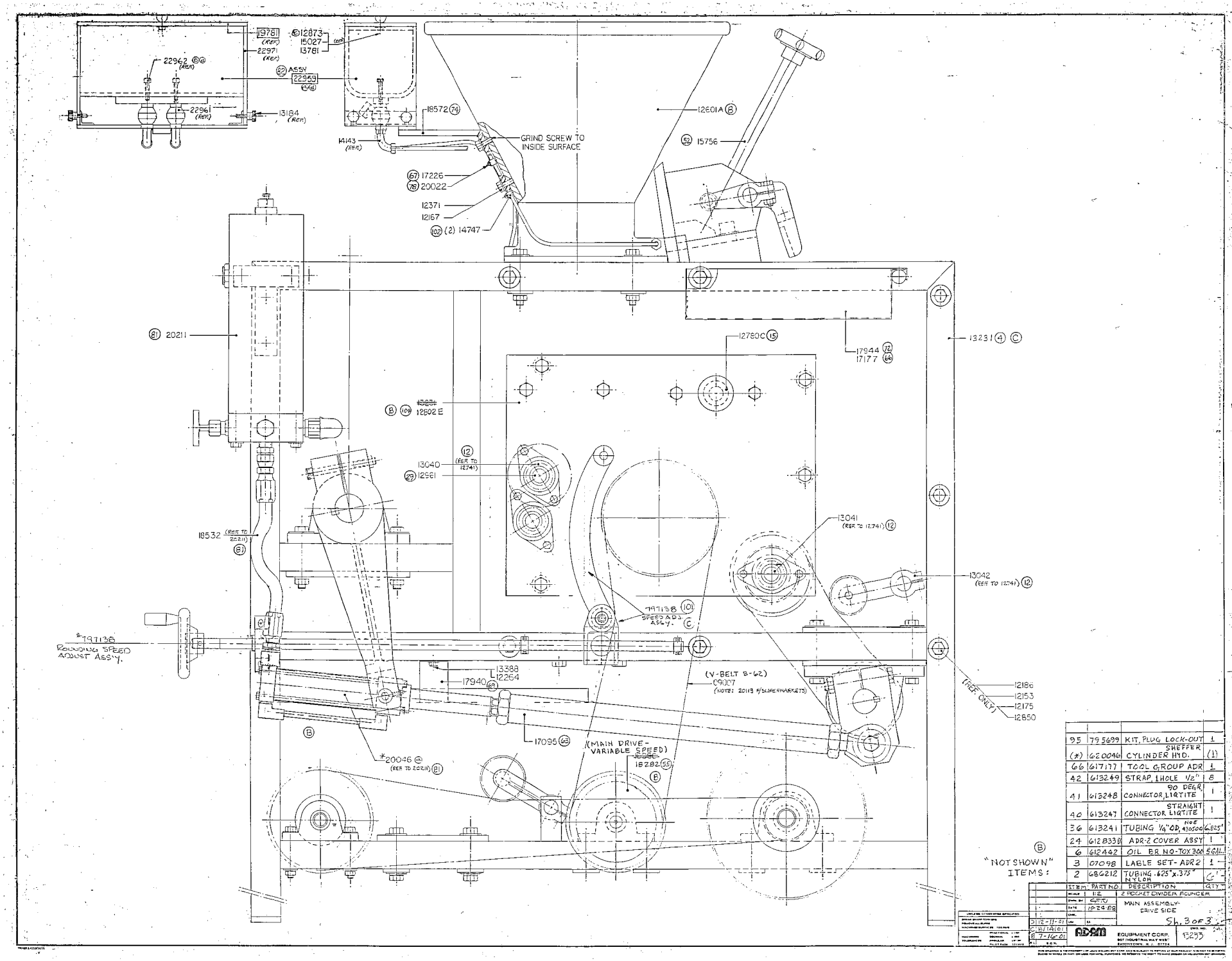

ITEM	PART NO.	DESCRIPTION	QTY
95	795699	KIT, PLUG LOCK-OUT	1
(*)	620046	SHEFFER CYLINDER HYD.	(1)
66	617177	TOOL GROUP ADR	1
42	613249	STRAP, 1 HOLE 1/2"	8
41	613248	90 DEGR CONNECTOR, LIQTITE	1
40	613247	STRAIGHT CONNECTOR LIQTITE	1
36	613241	TUBING 1/4" OD, 430500 NOE	6.625'
24	612833D	ADR-2 COVER ASSY	1
6	612442	OIL BR NO-TOX 300	5 GAL.
3	07098	LABLE SET- ADR2	1
2	686212	TUBING .625"x.375" NYLON	6'

SCALE 1:2 — 2 POCKET DIVIDER FOUNDER
DRWN BY CERO — MAIN ASSEMBLY- DRIVE SIDE
DATE 12-29-88
Sh. 3 OF 3
3/12-11-01
C-B/11/01
B 7-16-01
ADAM EQUIPMENT CORP. 867 INDUSTRIAL WAY WEST, EATONTOWN, N.J. 07724
13253

PARENT IT. NO. DESCRIPTION MAIN ASS'Y ADR/2C QTY 1 ITEM TYPE 1 LOW LEVEL 00
00613273 ENGR DRAW E13233 (M)SHT UNIT MEAS EA
STANDARD BATCH QUANTITY 1.000

RELATIVE LEVEL	SEQ NO.	COMPONENT ITEM NO.	DESCRIPTION	ENGINEERING DRAWING NUMBER	QUANTITY PER	ITEM UM	TYP	OPT NO.	FIRST OP SEQ	LT ADJ	EFFECTIVE DATES FROM	TO
1	0002	00686212	TUBING RD 0.625X0.375" TYGON		27.300	FT	4			.0		
1	0003	07098	LABEL SET ADR2&4 WHT/BL		1.000	EA	1			.0		
1	0001	07100	LABEL WEIGHT +	WHITE ON BLUE	1.000	EA	2			.0		
1	0004	00613231	FRAME ASY ADR 2	E13231	1.000	EA	1			.0		
.2	0001	00612153	NUT HEX FINISHED 1/2-13 GR5 ZP		8.000	EA	4			.0		
.2	0002	00612175	WASHER FLAT 0.500"ID ZP		8.000	EA	4			.0		
.2	0003	006128020000E	PLATE MT ADR2 22.000X17.000	C12802E	1.000	EA	9			.0		
.2	0004	00615844	FRAME SUB ASS'Y WLDMNT ADR2	D615844 (M)	1.000	EA	2			.0		
..3	0001	006128050 2	FRAME OPER SIDE SUBASSY ADR2	D612805 02 (M)	1.000	EA	2			.0		
...4	0001	13757	SQST 2.000" X 2.000" X 0.188"		4.303	FT	3			.0		
...4	0002	13757	SQST 2.000" X 2.000" X 0.188"		4.303	FT	3			.0		
...4	0003	13757	SQST 2.000" X 2.000" X 0.188"		4.167	FT	3			.0		
...4	0004	13757	SQST 2.000" X 2.000" X 0.188"		3.834	FT	3			.0		
...4	0005	13757	SQST 2.000" X 2.000" X 0.188"		3.834	FT	3			.0		
...4	0006	13757	SQST 2.000" X 2.000" X 0.188"		2.042	FT	3			.0		
...4	0007	13757	SQST 2.000" X 2.000" X 0.188"		1.021	FT	3			.0		
...4	0008	12876	CDF 0.250" X 1.000" C1018		2.042	FT	3			.0		
...4	0009	13175	LB 2.000X2.000X0.187" A36		.167	FT	3			.0		
...4	0010	12039	CDF 0.375" X 2.000" C1018		.667	FT	3			.0		
...4	0011	12244	CFR 0.750" C1018		.250	FT	3			.0		
...4	0012	12245	CFR 0.500" C1018		.365	FT	3			.0		
...4	0013	12112	CFR 1.000" C1018		.485	FT	3			.0		
...4	0014	00612178	SCREW HXHD CAP 1/2-13X0.750"		1.000	EA	4			.0		
..3	0002	0061280601	FRAME OPERATOR SIDE ASS'Y ADR2	D61280601 (M)	1.000	EA	2			.0		
...4	0001	13757	SQST 2.000" X 2.000" X 0.188"		4.303	FT	3			.0		
...4	0002	13757	SQST 2.000" X 2.000" X 0.188"		4.303	FT	3			.0		
...4	0003	13757	SQST 2.000" X 2.000" X 0.188"		4.167	FT	3			.0		
...4	0004	13757	SQST 2.000" X 2.000" X 0.188"		3.834	FT	3			.0		
...4	0005	13757	SQST 2.000" X 2.000" X 0.188"		3.834	FT	3			.0		
...4	0006	13757	SQST 2.000" X 2.000" X 0.188"		2.021	FT	3			.0		
...4	0007	13757	SQST 2.000" X 2.000" X 0.188"		1.021	FT	3			.0		
...4	0008	00612820	BRACKET MOUNT IDLER ADR	C12820	1.000	EA	2			.0		
....5	0001	12112	CFR 1.000" C1018		.230	FT	3			.0		
....5	0002	13745	LB 2.000" X 2.000" X 0.250"		.271	FT	3			.0		
...4	0009	13175	LB 2.000X2.000X0.187" A36		.167	FT	3			.0		
...4	0010	12039	CDF 0.375" X 2.000" C1018		.667	FT	3			.0		
...4	0011	12244	CFR 0.750" C1018		.250	FT	3			.0		
...4	0012	12245	CFR 0.500" C1018		.365	FT	3			.0		
..3	0003	13757	SQST 2.000" X 2.000" X 0.188"		1.417	FT	3			.0		
..3	0004	13757	SQST 2.000" X 2.000" X 0.188"		1.417	FT	3			.0		
..3	0005	13757	SQST 2.000" X 2.000" X 0.188"		1.417	FT	3			.0		
..3	0006	13757	SQST 2.000" X 2.000" X 0.188"		1.417	FT	3			.0		
.2	0005	006128030000N	PLATE MT ADR2 35.250X27.750	D12803N	1.000	EA	9			.0		
.2	0006	00799094	PIN COVER ADR2 OPER SIDE	B799094	4.000	EA	2			.0		
..3	0001	00691435	CFR 1.000" C1018		.832	FT	3			.0		
.2	0007	00799093	PIN COVER ADR2 DRIVE SIDE	B799093	4.000	EA	2			.0		
..3	0001	00691435	CFR 1.000" C1018		3.188	FT	3			.0		

PARENT ITEM NO. 00613233 DESCRIPTION MAIN ASS'Y ADR/2C
ENGR DRAW E13233 (M) SHT
STANDARD BATCH QUANTITY 1.000

QTY 1 ITEM TYPE 1 LOW LEVEL 00
UNIT MEAS EA

RELATIVE LEVEL	SEQ NO.	COMPONENT ITEM NO.	DESCRIPTION	ENGINEERING DRAWING NUMBER	QUANTITY PER	ITEM UM	TYP	OPT NO.	FIRST OP SEQ	LT ADJ	EFFECTIVE DATES FROM	TO
.2	0012	00612816	ROD CONN PLATES 6.094"L	A612816	4.000	EA	2			.0		
.2	0001	00691435	CFR 1.000" C1018		2.032	FT	3			.0		
.2	0013	00612817	SPACER MOUNT PLATES 5.187"L	A612817	4.000	EA	2			.0		
..3	0001	13229	RMT 1.375" X 0.156" C1018		1.712	FT	3			.0		
.2	0016	00612850	WASHER SPLIT LOCK 1/2"ID ZP		8.000	EA	4			.0		
.2	0019	00612990	STUD 1/2-13X1.750" STL ZP		8.000	EA	4			.0		
.2	0020	00613055	SCREW HXHD CAP 1/2-13X2.750"		8.000	EA	4			.0		
.2	0021	00613673	WASHER LOCK 0.500"ID ZP		8.000	EA	4			.0		
.2	0022	00613868	SCREW HXHD CAP 1/2-13X3.250"		8.000	EA	4			.0		
.2	0023	00614488	SCREW HXHD CAP 1/2-13X0.875"		8.000	EA	4			.0		
.2	0024	00615030	WASHER FLAT SAE 0.500" ID ZP		8.000	EA	4			.0		
.2	0006	00612442	OIL DIVIDER BR NO TOX 300		5.000	EA	4			.0		
.2	0008	006126010000A	HOPPER W/BACKPOCKET ASY ADR2	E12601A	1.000	EA	2			.0		
.2	0002	00610617	RING RETAINING SH-75 SIP4 25PC		2.000	EA	4			.0		
.2	0005	00612167	WASHER FLAT .375 USS ZP		4.000	EA	4			.0		
.2	0007	006126020000B	HOPPER SUB ASS'Y ADR2	E12602B	1.000	EA	2			.0		
..3	0001	00612603	HOPPER LOWER HALF ADR2	E12603	1.000	EA	2			.0		
...4	0001	00612646	CASTING HOPPER LOWER HALF	CASTING	1.000	EA	3			.0		
..3	0002	00612604	HOPPER UPPER HALF ADR2	E12604 (M)	1.000	EA	2			.0		
...4	0001	00612647	CASTING HOPPER UPPER HALF	CASTING	1.000	EA	3			.0		
..3	0003	00612854	SCREW HXHD CAP 1/2-13 X 1.250"		6.000	EA	4			.0		
..3	0004	00612855	PIN DOWEL 3/8 DIAX1.250"		2.000	EA	4			.0		
..3	0006	00612175	WASHER FLAT 0.500"ID ZP		6.000	EA	4			.0		
.2	0008	006126050000C	KNIFE ADR2 W/STAGGERED HOLES	B12605C (M)	1.000	EA	9			.0		
..3	0002	15678	CDF 0.250X2.000" B85		.623	FT	3			.0		
.2	0009	00612606	GUIDE BRG BK PKT RH 8.750"L	B12606	2.000	EA	9			.0		
..3	0002	00612148	CDSD 0.750" C1018		2.920	FT	3			.0		
.2	0010	006126070000B	GUIDE BACKPOCKET RS 8.750"L	B12607B	1.000	EA	9			.0		
..3	0002	12857	CDF 0.750" X 1.500" C1018		.766	FT	3			.0		
.2	0011	006126080000B	GUIDE BACKPOCKET LS 8.750"L	B12608B	1.000	EA	9			.0		
..3	0002	12857	CDF 0.750" X 1.500" C1018		.766	FT	3			.0		
.2	0017	00612846	SCREW HXHD CAP 3/8-16 X 2.250"		4.000	EA	4			.0		
.2	0018	00612848	RING RETAINING S108-75 S-PP		2.000	EA	4			.0		
.2	0019	00612849	WASHER FLAT 0.250"USS ZP		4.000	EA	4			.0		
.2	0020	00612850	WASHER SPLIT LOCK 1/2"ID ZP		4.000	EA	4			.0		
.2	0021	00612851	SCREW HXHD CAP 1/4-20 X 2.000"		2.000	EA	4			.0		
.2	0022	00612852	SCREW FH HX50C 1/4-20X0.500"		3.000	EA	4			.0		
.2	0026	00613782	SCREW HXHD CAP 1/4-20X0.500"		2.000	EA	4			.0		
.2	0027	00614070	WASHER SPLIT LOCK 3/8 ZP		1.000	EA	4			.0		
.2	0032	00619449	GUIDE OIL CATCH 2.250"L	A19449	2.000	EA	4			.0		
.2	0033	00612853	CONNECTOR MALE #P4MC2		1.000	EA	4			.0		
.2	0035	00624572	SHAFT CONN ROD ADR2 8.187"L	A24572	1.000	EA	9			.0		
..3	0001	12244	CFR 0.750" C1018		.685	FT	3			.0		
.2	0036	00625274	BACKPOCKET SUB ASS'Y ADR2	D25274	1.000	EA	2			.0		
..3	0001	00625275	BACKPOCKET ADR2	D25275	1.000	EA	2			.0		
...4	0001	00612643	CASTING BACKPOCKET	CASTING	1.000	EA	3			.0		
..3	0002	00612631	BASE BACKPOCKET ADR2	C61263101	1.000	EA	3			.0		

PARENT IT NO. DESCRIPTION MAIN ASS'Y ADR/2C QTY 1 ITEM TYPE 1 LOW LEVEL 00
00613233 ENGR DRAW E13233 (MD SHT)
STANDARD BATCH QUANTITY 1.000 UNIT MEAS EA

RELATIVE LEVEL	SEQ NO.	COMPONENT ITEM NO.	DESCRIPTION	ENGINEERING DRAWING NUMBER	QUANTITY PER	ITEM UM	TYP	OPT NO.	FIRST OP SEQ	LT ADJ.	EFFECTIVE DATES FROM	TO
...3	0003	00624573	GUIDE CONN ROD ADR2 L= 8.000"	B24573	2.000	EA	2			.0		
...4	0001	12353	CDF 0.500X1.500" C1018		1.334	FT	3			.0		
...3	0004	00685797	PIN ROLL 1/4 DIAX1.000"		2.000	EA	4			.0		
..3	0005	00612919	FITTING GREASE 29610 STRAIGHT		2.000	EA	4			.0		
..3	0006	00612908	SCREW SET HXSOC 3/8-16X1.500"		1.000	EA	4			.0		
...3	0007	00616918	SCREW FH HXSOC 5/16-18X1.500"		2.000	EA	4			.0		
...3	0008	00612894	SCREW FH HXSOC CAP ALLOY		2.000	EA	4			.0		
...3	0011	00793741	NUT FLANGE 3/8X16 BLACK STEEL		1.000	EA	4			.0		
...2	0037	00691440	LABEL CAUTION EMED 055018		2.000	EA	4			.0		
.2	0038	00795628	LABEL "KEEP HANDS AWAY" #17463		2.000	EA	4			.0		
.2	0039	00612153	NUT HEX FINISHED 1/2-13 GR5 ZP		4.000	EA	4			.0		
...2	0040	00612330	PLATE MT BEARING 1.750"L	A12339(M)	4.000	EA	2			.0		
...3	0001	16828	CDF 0.250" X 1.750" C1018		5.833	FT	3			.0		
.2	0042	00613122	SCREW HXHD CAP 1/2-13X3.750"		4.000	EA	4			.0		
...2	0043	00615030	WASHER FLAT SAE 0.500" ID ZP		4.000	EA	4			.0		
.2	0044	00613147	SCREW SET HXSOC 1/4-20X0.500"		2.000	EA	4			.0		
.2	0045	00612166	NUT HEX 3/8-16 GR5 ZP		1.000	EA	4			.0		
...1	0010	00612648	ROUNDING UNIT ASSY ADR2	E12648	1.000	EA	1			.0		
...2	0002	00612190	BEARING FLANGE SFT16 1.000"		2.000	EA	4			.0		
...2	0003	00612254	NUT HX 7/16-14 GR5 ZP		4.000	EA	4			.0		
...2	0004	00612284	SCREW HXHD CAP 3/8-16X1.250"		3.000	EA	4			.0		
.2	0006	006126500000B	GEAR SPUR C10160/"OD" ADR2,VDR	C12650B (M)	1.000	EA	4			.0		
.2	0015	006126700000A	COVER ROUNDING DRUM	D12670	1.000	EA	2			.0		
...3	0001	00612919	CASTING COVER ROUNDING DRUM	CASTING	1.000	EA	3			.0		
...2	0022	00612744	GEAR SPUR S1045 1.000" W/KW &	B612744(C)ADREK	1.000	EA	4			.0		
...2	0026	00612901	BEARING BALL 6016-2RS NR C/3		1.000	EA	4			.0		
.2	0030	00612907	BEARING BALL 6018 ZZNR		1.000	EA	4			.0		
.2	0034	00612930	ROUNDING UNIT SUB ASSY ADR2	E12648 (REF)	1.000	EA	1			.0		
..3	0001	00684384	SCREW FH HXSOC 1/2-13X0.750"		1.000	EA	4			.0		
...3	0003	00611163	UNION BRASS # 3250X2		2.000	EA	4			.0		
...3	0004	00611261	NIPPLE BRASS 3325X2		2.000	EA	4			.0		
...3	0005	00611262	ELBOW BRASS STREET # 3400X2		2.000	EA	4			.0		
..3	0008	006126490000D	HUB MOULDING UNIT	E12649D	1.000	EA	1			.0		
...4	0001	00612931	CASTING HUB ROUNDING UNIT	CASTING	1.000	EA	3			.0		
..3	0013	006126530000C	BEARING INNER RECIPR SUB ASS'Y	B12653C	1.000	EA	1			.0		
...4	0002	006126550000A	BUSHING BEARING BRONZE #12655A	B12655	1.000	EA	4			.0		
...4	0003	006179310000A	BEARING INNER RECIPR	D17931A	1.000	EA	2			.0		
...4	0001	00612934	CASTING BRG INNER RECIPR ADR	CASTING (NO DWG	1.000	EA	3			.0		
...4	0004	00686161	WIPER J-3500		1.000	EA	4			.0		
...4	0005	00685770	SCREW SET HXSOC 8-32X0.375"		2.000	EA	4			.0		
...4	0006	00628684	SCREW FH HXSOC 1/4-20X3.000"		1.000	EA	4			.0		
...4	0007	00614680	WASHER LOCK 0.250 ID ZP		1.000	EA	4			.0		
...4	0008	00612135	NUT HEX 1/4-20 FINISHED STL ZP		1.000	EA	4			.0		
...3	0014	00612658	SHAFT CONN ROD 3.500"L	A12656	1.000	EA	2			.0		
...4	0001	06562	ROD DRILL 1.000" CF OH		.292	FT	3			.0		
..3	0015	00612658	CRANK PLATE	C12658	1.000	EA	4			.0		
..3	0016	00612659	CLAMP DISC 0.218"L ADR,VDR,ND	A612659 (C)	1.000	EA	9			.0		

PARENT ITEM NO. 00612233 DESCRIPTION MAIN ASS'Y ADR/28 ENGR DRAW E13233 (M)SHT STANDARD BATCH QUANTITY 1.000 QTY 1 ITEM TYPE 1 UNIT MEAS EA LOW LEVEL 00

RELATIVE LEVEL	SEQ NO.	COMPONENT ITEM NO.	DESCRIPTION	ENGINEERING DRAWING NUMBER	QUANTITY PER	ITEM UM	TYP	OPT NO.	FIRST OP SEQ	LT ADJ	EFFECTIVE DATES FROM	TO
..4	0001	12378	CFR 1.250" C1018		.019	FT	3			.0		
..4	0018	006126600000D	SHAFT BEVEL GEAR 1.875"L	A12660	1.000	EA	4			.0		
..3	0023	00612676	ROD CONN SUB ASS'Y	B12676	1.000	EA	1			.0		
...4	0001	00612657	ROD CONNECTING MOULDING UNIT	D12657	1.000	EA	2			.0		
....5	0002	00612936	CASTING ROD CONN	CASTING	1.000	EA	3			.0		
..4	0002	00612958	BUSHING BEARING F102-6 ADR2		2.000	EA	4			.0		
..4	0024	00612677	BEARING OUTER RECIPR SUB ASS'Y	B12677	1.000	EA	2			.0		
..4	0001	00612943	CASTING BRG OUTER RECIPR	CASTING	1.000	EA	3			.0		
...4	0003	00617730	BEARING OUTER RECIPR	C17730	1.000	EA	4			.0		
..3	0025	00612902	NUT BEARING BH 07		1.000	EA	4			.0		
..3	0027	00612911	SCREW FH HXSOC 1/4-20X0.625"		9.000	EA	4			.0		
..3	0029	00612915	BEARING BALL 6005-2RS		3.000	EA	4			.0		
..3	0032	00612920	RING RETAINING HOI-243 STPA		1.000	EA	4			.0		
..3	0035	00612924	CAP SPHERCO BRG	B12924	1.000	EA	4			.0		
..3	0036	00612929	WASHER SPLIT LOCK 1/4" STL ZP		2.000	EA	4			.0		
..3	0037	00613386	SCREW FH HXSOC 1/4-20X0.750"		1.000	EA	4			.0		
..3	0038	00613532	RING BEARING HOLDING 0.562"L	A13532 (M)	1.000	EA	2			.0		
..4	0001	13581	NUT 3.000"-X-0.188" C1018		.047	FT	3			.0		
..3	0039	00613642	SCREW FH HXSOC 3/8-16X0.750"		1.000	EA	4			.0		
..3	0040	00613662	SCREW FH HXSOC 10-24X0.500"		3.000	EA	4			.0		
..3	0041	00614258	NUT HX 1/2-20 WASHER FACED		9.000	EA	4			.0		
..3	0042	00614745	BEARING SPHERCO COM 14 ROD END		1.000	EA	4			.0		
..3	0043	00619504	KEY LOCATION DRUM WELDMENT	A19504 (M)	1.000	EA	9			.0		
..4	0001	22846	CDSQ 0.437"		.209	FT	3			.0		
..4	0002	13428	CFR 0.437" C1018		.073	FT	3			.0		
..4	0044	006126520000D	SHAFT ROUNDING UNIT 26.812"L	D12652D (M)	1.000	EA	4			.0		
..3	0045	006126650000C	ROD TIE 11.875"L	B12665C	3.000	EA	2			.0		
...4	0001	13198	ROD THD 1/2-20 ZP		9.351	FT	3			.0		
..3	0046	00612667	PLATE MT 0.375"L	A12667	3.000	EA	1			.0		
..4	0001	06082	CFR 1.437" C1018		.297	FT	3			.0		
..4	0047	00612668	DRUM INNER SUB ASS'Y ADR2	D12668 (M)	1.000	EA	1			.0		
..4	0002	00612669	DRUM INNER L=11.375"	D12669	1.000	EA	4			.0		
...4	0003	00612945	COVER INNER DRUM 36"X 12"W	D12668	1.000	EA	2			.0		
....5	0001	00612947	BELTING RFT 3PL PYRAM 12"W		2.942	FT	4			.0		
...4	0005	00613505	RIVET FEMALE PART 9012-1861		16.000	EA	4			.0		
..4	0006	00613506	RIVET MALE PART 9012-1911		16.000	EA	4			.0		
..3	0048	00612903	NUT BEARING BH 14		1.000	EA	4			.0		
..3	0049	00612904	BEARING BALL 6007-2RS		2.000	EA	4			.0		
..3	0050	00612912	NUT ELASTIC STOP 3/8-16 9/16-		3.000	EA	4			.0		
..3	0051	00612916	RING RETAINING 5008-187		1.000	EA	4			.0		
..3	0052	00612919	FITTING GREASE 29610 STRAIGHT		2.000	EA	4			.0		
..3	0053	00686161	WIPER J6500		1.000	EA	4			.0		
..3	0054	006913B201	GEAR SET ROUNDING UNIT ADR	B69138201(C)	1.000	EA	9			.0		
...4	0001	00617108	GEAR BEVEL 5P25R25	C17108	1.000	EA	4			.0		
...4	0002	00612661	GEAR BEVEL 3P20L23 1.625"	C12661	1.000	EA	4			.0		
..3	0055	00796838	CLAMP DISC SPHERICAL BEARING	A796838(C)	1.000	EA	2			.0		
...4	01	12112	CFR 1.000" C1018		.021	FT	3			.0		

PARENT I NO. DESCRIPTION MAIN ASS'Y ADR/2C QTY 1 ITEM TYPE 1 LOW LEVEL 00
00612223 ENGR DRAW E13233 (M)3SHT UNIT MEAS EA
STANDARD BATCH QUANTITY 1.000

RELATIVE LEVEL	SEQ NO.	COMPONENT ITEM NO.	DESCRIPTION	ENGINEERING DRAWING NUMBER	QUANTITY PER	ITEM UM	TYP	OPT NO.	FIRST OP SEQ	LT ADJ	EFFECTIVE DATES FROM	TO
..3	0056	00796841	SCREW DISC SPECIAL BEARING	A796841(C)	1.000	EA	2			.0		
..4	0001	00796840	SCREW FLHD HXSOC 1/4-13 X1.00		1.000	EA	4			.0		
..2	0057	00614128	LOCK RING #RFN-7012-1.25"BORE		1.000	EA	4			.0		
..3	0058	00611165	UNION BRASS # 3250X2		2.000	EA	4			.0		
..3	0059	00684669	HOSE GREASE 12"L #10-212		1.000	EA	4			.0		
..3	0060	00612904	BEARING BALL 6007-2RS		1.000	EA	4			.0		
.2	0035	00612966	SCREW FH HXSOC 1/4-28X1.250"		8.000	EA	4			.0		
.2	0036	00612967	NUT HEX 1-8 FINISHED STL ZP		1.000	EA	4			.0		
.2	0037	00613037	SCREW SET HXSOC 5/16-18X0.250"		2.000	EA	4			.0		
.2	0038	00612970	PIN DOWEL 3/8 DIAX2.250"		1.000	EA	4			.0		
.2	0039	00612360	KEY STOCK 1/4 SQ CF C1035		.157	FT	4			.0		
.2	0041	00613148	SCREW SET HXSOC 3/8-16X0.750"		1.000	EA	4			.0		
.2	0043	00613774	SCREW HXHD CAP 1/4-20X0.375"		1.000	EA	4			.0		
.2	0044	00613781	SCREW HXHD CAP 1/4-20X0.625"		2.000	EA	4			.0		
.2	0045	00613888	SCREW HXHD CAP 7/16-14X1.500"		4.000	EA	4			.0		
.2	0046	00614011	WASHER SPLIT LOCK 7/16ID ZP		4.000	EA	4			.0		
.2	0047	00614042	BUSHING TAPERLOCK BORE 3.375"		1.000	EA	4			.0		
.2	0050	00615156	BUSHING TAPERLOCK BORE 1.250"		1.000	EA	4			.0		
.2	0052	0061267101	HANDWHEEL ROUND ADR2	A12671O1(M)	1.000	EA	2			.0		
.2	0001	00796418	HANDLE ROUND DISHED ADR/2		1.000	EA	4			.0		
.2	0053	0061258206000A	SHAFT BRUSH 22.875"L	B12682A	1.000	EA	4			.0		
.2	0054	00615622	PULLEY V BELT SHEAVE		1.000	EA	4			.0		
.2	0055	00689400	BELT V B- 63 HI POWER		1.000	EA	4			.0		
.2	0012	00612741	DRIVE SUB ASY ADR2	E12741	1.000	EA	2			.0		
.2	0001	00686482	SPROCKET 40B18S36 SINGLE TAPER		1.000	EA	4			.0		
.2	0002	00610483	CHAIN ANSI 40 RIV 1/2"		3.000	FT	4			.0		
.2	0003	00610484	LINK OFFSET CHAIN ANSI 40		1.000	EA	4			.0		
.2	0004	00610485	CHAIN LINK CONN ANSI 40		1.000	EA	4			.0		
.2	0005	00612190	BEARING FLANGE SFT16 1.000"		4.000	EA	4			.0		
.2	0017	00613040	DRIVE BRUSH SUB ASY ADR2	E12741 (M)RED	1.000	EA	2			.0		
..3	0001	00612254	NUT HX 7/16-14 GR5 ZP		4.000	EA	4			.0		
..3	0002	00612683	GEAR SPUR S 1020 1.000"KW&SS	A12683 (M)	2.000	EA	4			.0		
..3	0003	00612742	SHAFT SUB DRIVE 9.375"L	B12742	1.000	EA	1			.0		
...4	0001	12112	CFR 1.000" C101B		.781	FT	3			.0		
..3	0006	00613037	SCREW SET HXSOC 5/16-18X0.250"		4.000	EA	4			.0		
..3	0007	00615101	WASHER LOCK 0.437"ID ZP		4.000	EA	4			.0		
..3	0009	00612360	KEY STOCK 1/4"L SQ CF C1035		.334	FT	4			.0		
.2	0018	00613041	DRIVE ROUNDING SUB ASY ADR2	E12741 (M)	1.000	EA	2			.0		
..3	0002	00612683	GEAR SPUR S 1020 1.000"KW&SS	A12683 (M)	1.000	EA	4			.0		
..3	0003	00612742	SHAFT SUB DRIVE 9.375"L	B12742	1.000	EA	1			.0		
...4	0001	12112	CFR 1.000" C101B		.781	FT	3			.0		
..3	0007	00613037	SCREW SET HXSOC 5/16-18X0.250"		2.000	EA	4			.0		
..3	0008	00615101	WASHER LOCK 0.437"ID ZP		4.000	EA	4			.0		
..3	0009	00613038	KEY SQUARE 1/4" L= 4.000"		1.000	EA	4			.0		
.2	0020	00613888	SCREW HXHD CAP 7/16-14X1.500"		4.000	EA	4			.0		
.2	0029	00613042	TENSIONR 1S ASY&PTN202-06-01MD E12[illegible]		1.000	EA	2			.0		
..3	0001	00612395	TENSIONER DRIVE SSM-[illegible]		1.000	EA	4			.0		

PARENT ITEM NO. DESCRIPTION MAIN ASSLY ADR/2S
ENGR DRAW E15233 (M)1SHT QTY 1 ITEM TYPE 1 LOW LEVEL 00
STANDARD BATCH QUANTITY 1.000 UNIT MEAS EA

RELATIVE LEVEL	SEQ NO.	COMPONENT ITEM NO.	DESCRIPTION	ENGINEERING DRAWING NUMBER	QUANTITY PER	ITEM UM	ITEM TYP	OPT NO.	FIRST OP SEQ	LT ADJ	EFFECTIVE DATES FROM	TO
	0002	00612746	PIN MOUNT IDLER 4.000"L	A12746	1.000	EA	4			.0		
	0003	00613039	TAPBOLT HXHD 1/2-13X1.250"		1.000	EA	4			.0		
..3	0004	00614072	WASHER FLAT USS .875" ID ZP		1.000	EA	4			.0		
..3	0005	00679164	NUT HEX 7/8-9 SS		1.000	EA	4			.0		
..3	0006	00612396	SPROCKET IDLER 104 BORE 1/2"		1.000	EA	4			.0		
	0013	00612775	CHUTE ASY ADR2	D12775	1.000	EA	1			.0		
	0001	00685644	NUT NYLN INSET LOCKNUT 5/16-18		1.000	EA	4			.0		
	0002	00612264	WASHER FLAT USS 0.312" ID ZP		1.000	EA	4			.0		
.2	0003	00612776	CHUTE WELDMENT ADR2	C1277600	1.000	EA	9			.0		
..3	0001	00612146	CDSQ 0.750" C1018		1.032	FT	3			.0		
..3	0002	00612146	CDSQ 0.750" C1018		.125	FT	3			.0		
	0003	12022	CRS 0.060" (16GA) 24SF 480LB		.204	SF	3			.0		
.2	0004	00612779	PLATE MT CHUTE WELDMENT ADR2	B12779	1.000	EA	9			.0		
..3	0001	13207	CDF 0.250X3.000" C1018		.417	FT	3			.0		
..3	0002	09442	SQST 1.000X0.109" A513		.250	FT	3			.0		
.2	0005	00613119	KNOB KNURLED REID # SKA-7		1.000	EA	4			.0		
.2	0006	00613645	SCREW FH HXSOC 5/16-18X1.250"		1.000	EA	4			.0		
	0015	006127800000C	ROLLER DRIVE ASSY ADR2	D12780C	1.000	EA	1			.0		
.2	0001	00684711	SLEEVE URETHANE SLVO 1.875"		1.000	EA	4			.0		
.2	0002	006127810000C	ROLLER DRIVE ADR2 70.750"	C12781C (M)	1.000	EA	2			.0		
..3	0001	13047	CFR 2.000" C1018		1.730	FT	3			.0		
.2	0003	00612153	NUT HEX FINISHED 1/2-13 GR5 ZP		4.000	EA	4			.0		
.2	0005	006127820000A	GEAR SPUR S 1032 1.500"KW&SS	B12782A (M)	1.000	EA	4			.0		
	0006	00612783	PLATE END 3.000" DIA ADR2	A12783 (M)	1.000	EA	9			.0		
	0001	17007	CRS 0.187" C1018		.065	LB	3			.0		
.2	0007	00613036	SCREW SET AXSOC 5/16-18X0.500"		1.000	EA	4			.0		
.2	0008	00613058	TAPBOLT HXHD 3/8-16X0.750"		1.000	EA	4			.0		
.2	0009	00613787	SCREW HXHD CAP 1/2-13X1.750"		4.000	EA	4			.0		
.2	0010	00615999	KEY SQUARE 3/8" L= 2.250"		1.000	EA	9			.0		
	0011	00616000	BEARING FLANGE SFT 24 1.500"		2.000	EA	4			.0		
	0022	00612823	ELEC CONNECT ASY ADR2	C12823	1.000	EA	1			.0		
	0001	00615757	STARTER PANEL NEMA SIZE 0		1.000	EA	9			.0		
..3	0001	00631031	CONTACT MOTOR SS CA3-9-10-24ND		1.000	EA	4			.0		
..3	0002	00684080	RELAY OVRL GE-CR4G1WK		1.000	EA	4			.0		
..3	0004	00614162	FUSE FNM-5A 250V TIME DELAY		1.000	EA	4			.0		
	0005	00628247	FUSE HLR FOR FNM ACME FLH12600		1.000	EA	4			.0		
	0006	00628248	NAMEPLATE START IDEC NWAC 123B		1.000	EA	2			.0		
	0007	00628249	NAMEPLATE STOP IDEC NWAL 124R		1.000	EA	2			.0		
..3	0008	00628250	ENCLOSURE 10"X8"X3 1/8" PLSTC		1.000	EA	2			.0		
..3	0009	00631032	TRANSFORMER-50VA 120/240-24VAC		1.000	EA	4			.0		
..3	0010	00631033	BUTTON PUSH START IDEC ABW-110		1.000	EA	4			.0		
	0011	00631034	BUTTON PUSH STOP IDEC ABW-201R		1.000	EA	4			.0		
.2	0004	00686741	CORD ELECTRIC 16/ 8JO 300V		15.000	FT	4			.0		
	0005	00616338	NUT WIRE 72-B, #IDL0073		4.000	EA	4			.0		
.2	0006	00686714	WIRE STRANDED 14 GA BLACK		20.000	FT	4			.0		
.2	0007	00684137	WIRE STRANDED 16 GA GREY		20.000	FT	4			.0		
.2	08	00690865	PLUG KNOCKOUT 112"		1.000	EA	4			.0		

PARENT IT NO. DESCRIPTION MAIN ASS'Y ADR/2C QTY 1 ITEM TYPE 1 LOW LEVEL 00
0061-223 ENGR DRAW E13233 (M)3SHT. UNIT MEAS EA
STANDARD BATCH QUANTITY 1.000

RELATIVE LEVEL	SEQ NO.	COMPONENT ITEM NO.	DESCRIPTION	ENGINEERING DRAWING NUMBER	QUANTITY PER	ITEM UM	TYP	OPT NO.	FIRST OP SEQ	LT ADJ	EFFECTIVE DATES FROM	TO
.2	0009	00616107	BUSHING SNUB 1/2" HEYCO2057		5.000	EA	4			.0		
.2	0012	00613835	CONNECTOR LIQ TIGHT 45 DEGR		2.000	EA	4			.0		
.2	0013	00616387	CONNECTOR 1/2-5/8 CORD 172HUB		1.000	EA	4			.0		
.2	0014	00614894	LOCKNUT 101 0.500" CONDUIT		3.000	EA	4			.0		
.2	0015	00686297	SEALTITE 1/2"		4.000	FT	4			.0		
.2	0016	00614892	STRAP ONE HOLE 1.000"-262ST		2.000	EA	4			.0		
.2	0017	00613249	STRAP ONE HOLE 0.500"		1.000	EA	4			.0		
.2	0018	00615481	CLAMP WIRE PLASTIC 1/4" CABLE		5.000	EA	4			.0		
.2	0021	00612994	SWITCH MAGNETIC CONTACT SAFETY		6.000	EA	4			.0		
.2	0022	00612829	MOUNT PROX SWITCH 2.625"L ADR2	B12829 (M)	2.000	EA	9			.0		
..3	0001	12993	AS 0.125" 3003		.170	LB	3			.0		
.2	0023	00612831	MOUNT PROX SWITCH 2.500X2.625	B12831	2.000	EA	4			.0		
.2	0024	00691465	CLAMP CABLE PLASTIC 5/8"		10.000	EA	4			.0		
.2	0025	00795495	BRACKET MOUNT PROX SWITCH FOR	B795495	2.000	EA	2			.0		
..3	0001	12993	AS 0.125" 3003		3.064	LB	3			.0		
.2	0026	00795494	SPACER	A795494	1.000	EA	2			.0		
..3	0001	0069155301	DELRIN SHEET 1.000"		3.938	I2	3			.0		
.2	0027	00684220	PLUG ATTACHMENT L-18-30P		1.000	EA	4			.0		
1	0024	00612833000D	COVER ASY ADR2	E12833 (M)	1.000	EA	1			.0		
.2	0005	00612841	PIN MOUNT COVER 1.000"L	A12841	2.000	EA	1			.0		
..3	0001	12148	CFR 0.375" C1018		2.000	FT	3			.0		
.2	0010	00612985	KNOB PLASTIC DK-67		2.000	EA	4			.0		
.2	0023	00619502	HANGER BACK COVER 3.000"L ADR	A19502	2.000	EA	2			.0		
..3	0001	13108	CRF 0.125" X 0.750" C1018		.500	FT	3			.0		
.2	0028	00793640	COVERS ADR2 COMPLETE SET SS	793640 (D) ADR	1.000	ST	9			.0		
.2	0029	00794814	NEOPRENE RUBBER GROMMET STRIPS		4.000	FT	4			.0		
.2	0030	00794665	LATCH ACCESS DOORS ADR VDR		2.000	EA	4			.0		
.2	0031	00794000	HINGE DOOR INLINE 96-10-500-50		6.000	EA	4			.0		
.2	0032	00793999	LATCH DOOR OPERATOR SIDE ADR		1.000	EA	4			.0		
.2	0033	00794334	GROMMET 7/16 ID 11/16 OD		4.000	EA	4			.0		
.2	0034	00794333	PIN TOP COVER ADR2	A794333	2.000	EA	9			.0		
..3	0001	00684882	SR 0.375" 304		.416	FT	3			.0		
1	0029	00612761	BRUSH ASS'Y ADR2	D612761 (M)	1.000	EA	2			.0		
.2	0004	00612965	BRUSH SUB ASS'Y	C612965	1.000	EA	1			.0		
..3	0001	00612679	BRUSH ADR2 # ADA5-4	B12679	1.000	EA	4			.0		
..3	0002	00612680	CAP END FRONT	A12680	1.000	EA	4			.0		
..3	0003	00612681	CAP END REAR	A12681	1.000	EA	4			.0		
..3	0004	00612966	SCREW FH HXSOC 1/4-20X1.250"		8.000	EA	4			.0		
.2	0005	00612970	PIN DOWEL 3/8 DIAX2.250"		1.000	EA	4			.0		
.2	0096	00612972	WASHER FLAT 1.000" USS ZP		1.000	EA	4			.0		
.2	0098	00612967	NUT HEX 1-8 FINISHED STL ZP		1.000	EA	4			.0		
1	0030	00612969	WASHER FLAT 0.187"ID ZP		4.000	EA	4			.0		
1	0031	00613121	SCREW HXSOC 10-32X0.500"		8.000	EA	4			.0		
1	0036	00613241	TUBING 1/4"OD NO-E 43 0.500		6.825	FT	4			.0		
1	0040	00613247	CONNECTOR LIQ TITE STRAIGHT		1.000	EA	4			.0		
1	0041	00613248	CONNECTOR LIQ TIGHT 90 DEGR		1.000	EA	4			.0		
1	0042	00613249	STRAP ONE HOLE 0.500"		8.000	EA	4			.0		

PARENT ITEM NO. 00613223 DESCRIPTION MAIN ASS'Y ADR/2C QTY 1 ITEM TYPE 1 LOW LEVEL 00
ENGR DRAW E15223A LM SSHT UNIT MEAS EA
STANDARD BATCH QUANTITY 1.000

RELATIVE LEVEL	SEQ NO.	COMPONENT ITEM NO.	DESCRIPTION	ENGINEERING DRAWING NUMBER	QUANTITY PER	ITEM UM	TYP	OPT NO.	FIRST OP SEQ	LT ADJ	EFFECTIVE DATES FROM	TO
.1	0002	00615756	WEIGHT ADJUSTMT ASY ADR2	E15756	1.000	EA	1			.0		
.2	0001	00684678	SCREW SHOULDER HXSOC L= 1.000"		2.000	EA	4			.0		
.2	0002	00688616	PIN ROLL 3/16 DIAX1.250"		1.000	EA	4			.0		
.2	0004	00612166	NUT HEX 3/8-16 GR5 ZP		4.000	EA	4			.0		
.2	0005	00612167	WASHER FLAT .375 USS ZP		8.000	EA	4			.0		
.2	0006	00612293	SCREW HXHD CAP 3/8-16X1.500"		4.000	EA	4			.0		
.2	0008	00615109	HANDWHEEL WEIGHT ADJUST	A13109	1.000	EA	2			.0		
.2	0001	00613110	KNOB & LOCK #29703 NO HANDLE		1.000	EA	4			.0		
.2	0009	00613673	WASHER LOCK 0.500"ID ZP		2.000	EA	4			.0		
.2	0010	00613881	SCREW HXHD CAP 3/8-16X3.000"		2.000	EA	4			.0		
.2	0011	00613947	NUT HX 1/2-20 GR5 ZP		2.000	EA	4			.0		
.2	0012	00614014	RING RETAINING 4100-100		3.000	EA	4			.0		
.2	0014	00614078	WASHER LOCK 0.375"ID ZP		2.000	EA	4			.0		
.2	0015	00614135	PIN SINGLE ACT CC8-BCF-B-3.14		1.000	EA	4			.0		
.2	0016	00615029	WASHER FLAT SAE 0.375"ID ZP		4.000	EA	4			.0		
.2	0017	00615116	ACTUATOR DISCHARGE ASS'Y ADR2	A15116	1.000	EA	2			.0		
..3	0001	00684678	SCREW SHOULDER HXSOC L= 1.000"		2.000	EA	4			.0		
..3	0002	00625266	BUMPER POLYURETHANE 3.000"L	A25266	1.000	EA	2			.0		
...4	0001	04567	PLSBAR 0.750X3.00"POLYURETHANE		.063	FT	3			.0		
..3	0003	00625267	PLATE STRIKER L= 3" ADR2	A25267 (M)	1.000	EA	2			.0		
...4	0001	00691737	CDF 0.3125X0.750" C1018		.250	FT	3			.0		
..3	0004	00625268	BRACKET ACTUATOR DISCHG L= 3"	A25268	1.000	EA	2			.0		
...4	0001	15852	LB 1.500" X 1.500" X 0.250"		.250	FT	3			.0		
.2	0019	00615743	LEVER DISCHARGE	C15743	1.000	EA	1			.0		
..3	0001	00615743	CASTING LEVER DISCHARGE ADR2	CASTING	1.000	EA	3			.0		
.2	0020	00615745	LEVER WEIGHT ADJUST ADR2	C15745	1.000	EA	2			.0		
..3	0001	00615744	CASTING LEVER WEIGHT ADJ ADR2	CASTING	1.000	EA	3			.0		
.2	0021	00615747	LEVER PUSHOUT ADR2	C15747	2.000	EA	2			.0		
..3	0001	00615746	CASTING LEVER PUSH-OUT ADR2	CASTING	4.000	EA	3			.0		
.2	0022	00615748	CAM FOLLOWER CF-1.25"		2.000	EA	4			.0		
.2	0023	00615749	SHAFT WEIGHT ADJUST 14.375"L	B15749	1.000	EA	9			.0		
..3	0001	12112	CFR 1.000" C1018		1.198	FT	3			.0		
.2	0024	00615750	INDICATOR WEIGHT ADJ 9.000"L	B15750	1.000	EA	2			.0		
..3	0001	12245	CFR 0.500" C1018		.750	FT	3			.0		
.2	0025	00615751	SHAFT DISCHARGE LVR 13.250"L	A15751	1.000	EA	1			.0		
..3	0001	12112	CFR 1.000" C1018		1.104	FT	3			.0		
.2	0026	00615752	ACTUATOR DISCHARGE ASS'Y ADR2	A15752	1.000	EA	2			.0		
..3	0001	00684678	SCREW SHOULDER HXSOC L= 1.000"		2.000	EA	4			.0		
..3	0002	00625266	BUMPER POLYURETHANE 3.000"L	A25266	1.000	EA	2			.0		
...4	0001	04567	PLSBAR 0.750X3.00"POLYURETHANE		.063	FT	3			.0		
..3	0003	00625267	PLATE STRIKER L= 3" ADR2	A25267 (M)	1.000	EA	2			.0		
...4	0001	00691737	CDF 0.3125X0.750" C1018		.250	FT	3			.0		
..3	0004	00625269	BRACKET ACTUATOR DISCHG L= 3"	A25269	1.000	EA	2			.0		
...4	0001	15974	LB 2.500X1.500X0.250" A36		.250	FT	3			.0		
.2	0027	00615753	BLOCK WEIGHT ADJUST 4.500"L	B15753	1.000	EA	2			.0		
..3	0001	15851	CDF 1.000" X 1.500" C1018		.375	FT	3			.0		
.2	30	00619201	PLATE INDICATOR 2.625"L ADR2	A19201	1.000	EA	2			.0		

PARENT I NO. DESCRIPTION MAIN ASS'Y ADR/2C QTY 1 ITEM TYPE 1 LOW LEVEL 00
00615233 ENGR DRAW E13235 (M)39H1 UNIT MEAS EA
STANDARD BATCH QUANTITY 1.000

RELATIVE LEVEL	SEQ NO.	COMPONENT ITEM NO.	DESCRIPTION	ENGINEERING DRAWING NUMBER	QUANTITY PER	ITEM UM	TYP	OPT NO.	FIRST OP SEQ	LT ADJ	EFFECTIVE DATES FROM	TO
..4	0001	12022	CRS 0.040" (16GA) 24SF /80LB		.219	SF	3			.0		
.2	0032	00625267	PLATE STRIKER, L= 3" ADR2	A25267 (M)	2.000	EA	2			.0		
..4	0001	00691737	CDF 0.3125X0.750" C1018		.500	FT	3			.0		
.2	0033	00615850	PLUNGER BALL W-18-N		1.000	EA	4			.0		
.2	0034	00625266	BUMPER POLYURETHANE 3.000"L	A25266	2.000	EA	2			.0		
..3	0001	04547	PLSBAR 0.750X3.00"POLYURETHANE		.126	FT	3			.0		
.2	0035	00615754	PIN TAPER #6 X 1.750"		1.000	EA	4			.0		
.2	0036	00615030	WASHER FLAT SAE 0.500" ID ZP		2.000	EA	4			.0		
.2	0038	00614041	PIN LEVER MOUNT L= 4.562"		1.000	EA	2			.0		
..3	0001	12252	CFR 0.625" C1018		.380	FT	3			.0		
1	0055	00618282	DRIVE MAIN ASY ADR2 W/VAR SPD	E18282 (M)	1.000	EA	2			.0		
.2	0001	00684480	BELT VAR SPEED 1922V630		1.000	EA	4			.0		
.2	0002	00685466	BUSHING BEARING 1012FF		1.000	EA	4			.0		
.2	0003	00685722	JOINT UNIVERSAL UJ-6 3/8"X3/8"		1.000	EA	4			.0		
.2	0004	00610000	SCREW HXHD CAP 1/4-20X0.750"		2.000	EA	4			.0		
.2	0005	00610601	CHAIN ANSI 40-2 RIV 1/2"		3.000	FT	4			.0		
.2	0006	00610603	LINK CONN CHAIN ANSI 40-2		1.000	EA	4			.0		
.2	0007	00612395	TENSIONER DRIVE 8SM-4		1.000	EA	4			.0		
.2	0008	00613087	SPROCKET IDLER 204 BORE 1/2"		1.000	EA	4			.0		
.2	0009	00613096	PULLEY VAR SPEED #1270 0.875"		1.000	EA	4			.0		
.2	0010	00613370	BASE VARIABLE SPEED		1.000	EA	4			.0		
.2	0011	00616089	BELT TIMING 480H100		1.000	EA	4			.0		
.2	0012	00616091	MOTOR TEFC 1.50HP1140 208-230/		1.000	EA	4			.0		
.2	0013	00618276	SHAFT V.S.DR SECOND ASY ADR2	C18276 (M)	1.000	EA	2			.0		
..3	0001	00685979	SPROCKET D40B15 A5 1.250"KW&SS		1.000	EA	4			.0		
..3	0002	00612330	PLATE MT BEARING 1.750"L	A12330(M)	1.000	EA	2			.0		
...4	0001	16828	CDF 0.250" X 1.750" C1018		1.458	FT	3			.0		
..3	0003	00614690	BEARING PILLOW BLK NP 20 1.250		2.000	EA	4			.0		
..3	0004	00615889	SPROCKET 40BS15HT 1.250"		1.000	EA	4			.0		
..3	0005	00615960	SHAFT DRIVE SECOND 22.000"L	B15960	1.000	EA	2			.0		
...4	0001	12378	CFR 1.250" C1018		1.917	FT	3			.0		
..3	0006	00612360	KEY STOCK 1/4 SQ CF C1035		.438	FT	4			.0		
..3	0007	00613391	SCREW HXHD CAP 3/8-16X0.750"		1.000	EA	4			.0		
..3	0008	00614078	WASHER LOCK 0.375"ID ZP		1.000	EA	4			.0		
..3	0009	00613151	WASHER FENDER ID 3/8 OD 1.5 ZP		1.000	EA	4			.0		
..3	0010	00613973	PULLEY TIMINGBELT 72H100 SF		1.000	EA	4			.0		
..3	0011	00614501	BUSHING TAPERLOCK BORE 1.250"		1.000	EA	4			.0		
.2	0014	00618277	SHAFT V.S.DR PRIMARY ASY ADR2	C18277 (M)	1.000	EA	2			.0		
..3	0001	00685800	PULLEY VS DRIVEN SHEAVE		1.000	EA	4			.0		
..3	0002	00613094	BUSHING TAPERLOCK BORE 1.000"		1.000	EA	4			.0		
..3	0003	00612355	BEARING PILLOW BLK NP 16 1"		2.000	EA	4			.0		
..3	0005	00615978	SHAFT PRIMARY DRIVE 28.500"L	B15978	1.000	EA	2			.0		
...4	0001	12112	CFR 1.000" C1018		2.375	FT	3			.0		
..3	0006	00615979	PULLEY VAR SPEED #1A7 11.000"		1.000	EA	4			.0		
..3	0007	00614513	PULLEY TIMINGBELT 18H100 3A		1.000	EA	4			.0		
..3	0008	00616512	BUSHING TAPERLOCK BORE 1.000"		1.000	EA	4			.0		
..3	0009	00612360	KEY STOCK 1/4 SQ CF C1035		.209	FT	4			.0		

PARENT ITEM NO: 00612033 DESCRIPTION MAIN ASSY ADR/2B QTY 1 ITEM TYPE 1 LOW LEVEL 00
ENGR DRAW E13233 (M) SHT UNIT MEAS EA
STANDARD BATCH QUANTITY 1.000

RELATIVE LEVEL	SEQ NO.	COMPONENT ITEM NO.	DESCRIPTION	ENGINEERING DRAWING NUMBER	QUANTITY PER	ITEM UM	TYP	OPT NO.	FIRST OP SEQ	LT ADJ	EFFECTIVE DATES FROM	TO
	0010	00612360	KEY STOCK 1/4 SQ CR C1035		.375	FT	4			.0		
	0011	00612166	NUT HEX 3/8-16 GR5 ZP		4.000	EA	4			.0		
..3	0012	00613882	SCREW HXHD CAP 3/8-16 X 3.500"		4.000	EA	4			.0		
..3	0013	00614070	WASHER SPLIT LOCK 3/8 ZP		4.000	EA	4			.0		
..3	0014	00618268	PLATE MT 1.750"L ADR2	A18268 (M)	4.000	EA	9			.0		
	0001	16826	CDF 0.250" X 1.750" C1018		.584	FT	3			.0		
	0015	00613511	PULLEY TMGBELT ASY 16H100 RGY		1.000	EA	2			.0		
	0001	00614513	PULLEY TIMINGBELT 16H100 JA		1.000	EA	4			.0		
...4	0002	00616512	BUSHING TAPERLOCK BORE 1.000"		1.000	EA	4			.0		
.2	0015	00618278	PLATE MT VS DRIVE 20.500"L	C18278	1.000	EA	9			.0		
..3	0001	15987	CDF 0.375" X 8.000" C1018		1.139	FT	3			.0		
	0016	00618782	DRIVE ADR2/PREP DRV VAR SPEED	E18282	1.000	EA	2			.0		
	0001	00610483	CHAIN ANSI 40 RIV 1/2"		2.000	FT	4			.0		
	0002	00610485	CHAIN LINK CONN ANSI 40		1.000	EA	4			.0		
..3	0003	00612395	TENSIONER DRIVE BSH-4		1.000	EA	4			.0		
..3	0004	00612396	SPROCKET IDLER 104 BORE 1/2"		1.000	EA	4			.0		
..3	0005	00612854	SCREW HXHD CAP 1/2-13 X 1.250"		1.000	EA	4			.0		
	0017	00623845	ROD EXTENSION 31.000"L CFR ADR	A23845 (M)	1.000	EA	2			.0		
	0001	12252	CFR 0.625" C1018		2.584	FT	3			.0		
	0018	00623846	BRACKET SUPPORT 2.500"L	B23846	1.000	EA	4			.0		
.2	0019	00623847	HANDWHEEL SPEED ADJUST	A23847	1.000	EA	4			.0		
.2	0020	00623938	SPACER PLATE MOUNT 8.000"L	A23938	2.000	EA	9			.0		
..3	0001	15128	CDF 0.375X1.750" C1018		1.334	FT	3			.0		
.2	0023	00612279	COLLAR ID 0.375 C-037		1.000	EA	4			.0		
	0024	00618275	SHAFT V S DR PROOFER ASY ADR2	C18275 (M)	1.000	EA	1			.0		
	0001	00689444	SPROCKET 40B24 AS TL 1.000"		1.000	EA	4			.0		
..3	0002	00612355	BEARING PILLOW BLK NP 18 1"		2.000	EA	4			.0		
..3	0003	00614582	SPROCKET 40B45 TL ASY 1.000"		1.000	EA	4			.0		
..3	0004	00615998	SHAFT PROOFER DRIVE 23.406"L	B15998	1.000	EA	2			.0		
	0001	12112	CFR 1.000" C1018		1.358	FT	3			.0		
	0006	00623810	SPACER VS DRIVE 5.500"L	A23810	2.000	EA	9			.0		
	0001	12353	CDF 0.500X1.500" C1018		.916	FT	3			.0		
..3	0007	00612360	KEY STOCK 1/4 SQ CR C1035		.355	FT	4			.0		
..3	0008	00689937	SPROCKET 40BS17HT 1.000"KW		1.000	EA	4			.0		
.2	0025	00623702	COVER VAR DRV PULLEY WELDMENT	C23702 (M)	1.000	EA	2			.0		
	0001	12022	CRS 0.060" (16GA) 24SF/80LB		1.688	SF	3			.0		
	0002	12022	CRS 0.060" (16GA) 24SF/80LB		.047	SF	3			.0		
	0003	12022	CRS 0.060" (16GA) 24SF/80LB		1.521	SF	3			.0		
.2	0026	00613936	WASHER SPLIT LOCK 3/4" ZP		2.000	EA	4			.0		
.2	0027	00612186	SCREW HXHD CAP 1/2-13X3.500"		2.000	EA	4			.0		
.2	0028	00612153	NUT HEX FINISHED 1/2-13 GR5 ZP		4.000	EA	4			.0		
.2	0029	00612175	WASHER FLAT 0.500"ID ZP		2.000	EA	4			.0		
.2	0030	00612850	WASHER SPLIT LOCK 1/2"ID ZP		4.000	EA	4			.0		
.2	0031	00612849	WASHER FLAT 0.250"ID ZP		3.000	EA	4			.0		
.2	0032	00613781	SCREW HXHD CAP 1/4-20X0.625"		3.000	EA	4			.0		
.2	0033	00613122	SCREW HXHD CAP 1/2-13X3.750"		2.000	EA	4			.0		
.2	34	00612330	PLATE MT BEARING 1.750"L	A12330(M)	1.000	EA	2			.0		

PARENT I NO. DESCRIPTION MAIN ASS'Y ADR/2C QTY 1 ITEM TYPE 1 LOW LEVEL 00
00617253 ENGR DRAW E17253 (M)SHT1 UNIT MEAS EA
STANDARD BATCH QUANTITY 1.000

RELATIVE LEVEL	SEQ NO.	COMPONENT ITEM NO.	DESCRIPTION	ENGINEERING DRAWING NUMBER	QUANTITY PER	ITEM UM	OPT TYP	FIRST NO. OP SEQ	LT ADJ	EFFECTIVE DATES FROM	TO
.2	0001	16828	CDF 0.250" X 1.750" C1018		1.459	FT	3		.0		
.2	0035	00616714	PIN DOWEL 1/8 DIAX1.750"		1.000	EA	4		.0		
.2	0036	00612860	PIN DOWEL 1/8 DIAX0.750"		1.000	EA	4		.0		
.2	0037	00612257	SCREW HXHD CAP 5/16-18X0.750"		2.000	EA	4		.0		
.2	0038	00613141	SCREW HXHD CAP 1/2-13X2.000"		1.000	EA	4		.0		
1	0059	00616931	SCREW THUMB 1/4-20X1.000"		2.000	EA	4		.0		
1	0060	00617084	BRACKET MOUNT HYDRAULIC ASS'Y	B17084 (M)	1.000	EA	9		.0		
.2	0001	12273	CDF 0.375" X 1.500" C1018		.500	FT	3		.0		
.2	0002	12273	CDF 0.375" X 1.500" C1018		.375	FT	3		.0		
1	0063	00617095	CRANKSHAFT&PIVOT ARM ASY ADR2	E17095	1.000	EA	1		.0		
.2	0001	00611977	PIN SINGLE ACTION LB12ST276Q		1.000	EA	4		.0		
.2	0002	00612153	NUT HEX FINISHED 1/2-13 GR5 ZP		4.000	EA	4		.0		
.2	0003	00612167	WASHER FLAT .375 USS ZP		1.000	EA	4		.0		
.2	0004	00612359	SCREW SET HXSOC 5/16-18X0.750"		1.000	EA	4		.0		
.2	0005	00612703000B	CRANKSHAFT ADR2	C12703	1.000	EA	1		.0		
..3	0001	00613043	CASTING CRANKSHAFT	CASTING	1.000	EA	3		.0		
.2	0008	00612711	PLATE MT 8.250"L	A12711	4.000	EA	9		.0		
.2	0009	12039	CDF 0.375" X 2.000" C1018		2.752	FT	3		.0		
.2	0010	00617120000A	ROD CONN BACKPOCKET ASS'Y	C12712A	1.000	EA	2		.0		
.2	0001	00613055	SCREW HXHD CAP 1/2-13X2.750"		2.000	EA	4		.0		
..3	0002	00617771	CAP BOTTOM CONN ROD ADR2 BKPKT	B17771	1.000	EA	2		.0		
...4	0001	00617772	CASTING ROD CONN BOTTOM CAP	CASTING	1.000	EA	3		.0		
..3	0003	00617963	ROD CONN BACKPOCKET ADR2	C17963	1.000	EA	2		.0		
...4	0001	00617962	CASTING ROD CONN BACKPOCKET	CASTING	1.000	EA	3		.0		
.2	0011	00612736	SPROCKET 40B36 AS 1.750"KW&SS		1.000	EA	4		.0		
.2	0012	00612850	WASHER SPLIT LOCK 1/2"ID ZP		4.000	EA	4		.0		
.2	0013	00612917	FITTING GREASE 25610 STRAIGHT		1.000	EA	4		.0		
.2	0016	00613052	BEARING PILLOW BLK NP 2.000"		4.000	EA	4		.0		
.2	0017	00613053	SCREW HXHD CAP 5/8-11X4.000"		8.000	EA	4		.0		
.2	0018	00613054	NUT HX 5/8-11 GR5 ZP		8.000	EA	4		.0		
.2	0019	00613056	BEARING ROD END TRE-16N		1.000	EA	4		.0		
.2	0020	00613063	BEARING SHELL 2.000"L	A13063(M)	1.000	EA	4		.0		
.2	0022	00613148	SCREW SET HXSOC 3/8-16X0.750"		1.000	EA	4		.0		
.2	0024	00613677	WASHER FLAT 0.625"ID ZP		16.000	EA	4		.0		
.2	0025	00613775	SCREW HXHD CAP 5/8-11X4.500"		4.000	EA	4		.0		
.2	0027	00614049	FITTING GREASE STR SHT-ALEMITE		1.000	EA	4		.0		
.2	0028	00614071	WASHER SPLIT LOCK 5/8 ZP		8.000	EA	4		.0		
.2	0029	00614424	BEARING ROD END TM-12N		1.000	EA	4		.0		
.2	0030	00614490	SCREW HXSOC 1/2-13X4.000"		4.000	EA	4		.0		
.2	0031	00797046	NUTJAM HEX 1 1/4-12 REWORK ADR	B797046(C)	2.000	EA	2		.0		
..3	0001	00614492	NUT JAM HX 1.25-12 ZP		2.000	PK	4		.0		
.2	0032	00614664	WASHER FLAT SAE 0.437"IDX1 1/8		1.000	EA	4		.0		
.2	0034	00616001	SPROCKET D40B45 AS 2.000"KW&SS		1.000	EA	4		.0		
.2	0035	00618483	SHAFT PIVOT ARM 27.000"L	B18483	1.000	EA	1		.0		
..3	0001	13047	CFR 2.000" C1018		2.250	FT	3		.0		
.2	0036	00618581	ARM PIVOT ADR2	C18581	1.000	EA	1		.0		
..3	0001	00620075	CASTING ARM PIVOT ADR2&4	(NO DWG.)	1.000	EA	3		.0		

PARENT ITEM NO. DESCRIPTION MAIN ASSY ADR/2C QTY 1 ITEM TYPE 1 LOW LEVEL 00
00613333 ENGR DRAW E12333 (M) SHT. UNIT MEAS EA
STANDARD BATCH QUANTITY 1.000

RELATIVE LEVEL	SEQ NO.	COMPONENT ITEM NO.	DESCRIPTION	ENGINEERING DRAWING NUMBER	QUANTITY PER	ITEM UM	TYP	OPT NO.	FIRST OP SEQ	LT ADJ	EFFECTIVE DATES FROM	TO
.2	0037	00618582	ARM MAIN PISTON ADR2	C18582	1.000	EA	1			.0		
.2	0001	00620074	CASTING ARM MAIN PISTON ADR4		1.000	EA	3			.0		
.2	0038	00620044	PIVOT CRANKSHAFT WELDMENT ADR2	C2004400	1.000	EA	9			.0		
..3	0001	12378	CFR 1.250" C1018		.256	FT	3			.0		
..3	0002	13046	CDF 1.250X4.000" C1018		.521	FT	3			.0		
.2	0039	00620095	NUT JAM HX 3/4-16		1.000	EA	4			.0		
.2	0040	00623952	WASHER PIVOT CRKSHFT .250"L	A23952	1.000	EA	4			.0		
.2	0041	00624831	ROD CONN PIVOT ARM 21.5"L	B24831 (M)	1.000	EA	9			.0		
..3	0001	13047	CFR 2.000" C1018		1.792	FT	3			.0		
.2	0042	00613391	SCREW HXHD CAP 3/8-16X0.750"		1.000	EA	4			.0		
.2	0043	00613051	KEY STOCK 1/2 SQ CF C1035		.688	EA	4			.0		
.2	0044	00612739	KEY STOCK 3/8 SQ CF C1035		.178	EA	4			.0		
1	0065	00617105	PISTON MAIN ASSY ADR2	C17105	1.000	EA	2			.0		
.2	0001	00686616	PIN ROLL 5/16 DIAX1.250"		1.000	EA	4			.0		
.2	0002	00612686000F	PISTON MAIN ADR2	D12686F	1.000	EA	9			.0		
..3	0001	00613000	CASTING MAIN PISTON	CASTING	1.000	EA	3			.0		
.2	0003	00613148	SCREW SET HXSOC 3/8-16X0.750"		1.000	EA	4			.0		
.2	0004	00614424	BEARING ROD END TM 12N		1.000	EA	4			.0		
.2	0005	00617106	SHAFT MAIN PISTON 5.875"L	C17105	1.000	EA	4			.0		
.2	0007	00620095	NUT JAM HX 3/4-16		1.000	EA	4			.0		
.2	0008	00625273	ROD CONN MAIN PLUNGER 9.000"L	A25273	1.000	EA	2			.0		
..3	0001	13744	CDSQ 1.250" C1018		.750	FT	3			.0		
1	0066	00617177	TOOL GROUP ADR2		1.000	EA	0			.0		
.2	0001	00684668	GUN GREASE HEAVY DUTY		1.000	EA	4			.0		
.2	0002	00684679	CARTRIDGE REPLACEMENT GREASE		1.000	EA	4			.0		
.2	0004	00612915	BEARING BALL 2005-2RS		1.000	EA	4			.0		
.2	0005	00617156	TOOL SOCKET T-HANDLE ADR2	A17156 (M)	1.000	EA	2			.0		
..3	0001	00680119	SOCKET 9/16-3/8 DRIVE SK		1.000	EA	4			.0		
..3	0002	12148	CFR 0.375" C1018		.646	FT	3			.0		
..3	0003	12148	CFR 0.375" C1018		.375	FT	3			.0		
.2	0006	00617159	SCREW DRIVER 8"X3/8" #6C258		1.000	EA	4			.0		
.2	0007	00617160	ALLEN WRENCH SET #1A448		1.000	EA	4			.0		
.2	0008	00617161	WRENCH 3/4" #2A271		1.000	EA	4			.0		
.2	0009	00617162	WRENCH 1/2"X9/16" #2A301		1.000	EA	4			.0		
.2	0010	00617163	WRENCH ADJUSTABLE 6" #6X314		1.000	EA	4			.0		
.2	0011	00617164	PLIER SLIP JOINT 6" #5X629		1.000	EA	4			.0		
.2	0012	00617166	SCRAPER CHAMBR/PISTN 10.000"L	A17166	1.000	EA	1			.0		
..3	0001	12883	CDF 0.125X1.000" C1018		.833	FT	3			.0		
.2	0014	00625346	PULLER MEAS PISTON WLDMNT ADR2	A2534600	1.000	EA	1			.0		
..3	0001	12148	CFR 0.375" C1018		.667	FT	3			.0		
..3	0002	12148	CFR 0.375" C1018		.375	FT	3			.0		
.2	0015	00624844	PULLER PISTON ADR2C/B WELDMENT C24844 (M)		1.000	EA	2			.0		
..3	0001	12094	CDF 0.188X0.750" C1018		.261	FT	3			.0		
..3	0002	12320	CFR 0.313" C1018		.448	FT	3			.0		
..3	0003	12320	CFR 0.313" C1018		.313	FT	3			.0		
.2	0016	00684669	HOSE GREASE 12"L #10-212		1.000	EA	4			.0		
1	[illegible]7	00617226	WASHER FLAT NR 8 ZP		6.000	EA	4			.0		

PARENT ITEM NO. DESCRIPTION MAIN ASS'Y ADR/2C QTY 1 ITEM TYPE 1 LOW LEVEL 00
0041 2SS ENGR DRAW E13233 (M)3SHT UNIT MEAS EA
STANDARD BATCH QUANTITY 1.000

RELATIVE LEVEL	SEQ NO.	COMPONENT ITEM NO.	DESCRIPTION	ENGINEERING DRAWING NUMBER	QUANTITY PER	ITEM UM	OPT TYP	FIRST OP NO.	LT SEQ	ADJ	EFFECTIVE DATES FROM	TO
1	0068	00617939	HOLDER CATCH PAN LH ASS'Y ADR2	B17939 (M)	1.000	EA	2			.0		
.2	0001	12027	CRS 0.075" (14GA)		.292	LB	3			.0		
.2	0002	12027	CRS 0.075" (14GA)		.064	LB	3			.0		
.2	0003	12027	CRS 0.075" (14GA)		.006	LB	3			.0		
1	0069	00617940	HOLDER CATCH PAN RH ASS'Y ADR2	B17940	1.000	EA	2			.0		
.2	0001	12027	CRS 0.075" (14GA)		.292	LB	3			.0		
.2	0002	12027	CRS 0.075" (14GA)		.064	LB	3			.0		
.2	0003	12027	CRS 0.075" (14GA)		.006	LB	3			.0		
1	0070	00617941	CATCH PAN ADR2 16.250X24.000	B17941	1.000	EA	9			.0		
.2	0001	12022	CRS 0.060" (16GA) 24SF /80LB		3.000	SF	3			.0		
1	0072	00617944	TOOL BOX ADR2 14.750"L	B17944	1.000	EA	2			.0		
.2	0001	12022	CRS 0.060" (16GA) 24SF /80LB		1.723	SF	3			.0		
1	0074	00618572	BRACKET OIL RESERVOIR ASS'Y	D618572	1.000	EA	9			.0		
.2	0001	13761	LB 1.000" X 1.000" X 0.125"		.834	FT	3			.0		
.2	0002	12078	CDF 0.250" X 1.250" C1018		1.000	FT	3			.0		
.2	0003	18078	CDF 0.375X1.250" C1018		.917	FT	3			.0		
1	0075	00686212	TUBING RD 0.625X0.375" TYGON		22.300	FT	4			.0		
1	0078	00620022	SCREW HXHD CAP 8-32X0.375"		10.000	EA	4			.0		
1	0081	00620211	HYDRAULIC UNIT ASS'Y ADR 2&4	E620211	1.000	EA	1			.0		
.2	0003	00613015	VALVE RELIEF DEDS6K1X7100		1.000	EA	4			.0		
.2	0004	00614617	VAEVE NEEDLE B-310-SS		1.000	EA	4			.0		
.2	0007	00614783	VALVE CHECK CXEB-X-AV		1.000	EA	4			.0		
.2	0008	00615488	ADAPTER JIC-MALE TO NPTF MALE		3.000	EA	4			.0		
.2	0010	00616951	NIPPLE 3/8"NPT 2.5"L BRASS		1.000	EA	4			.0		
.2	0011	00618572	HOSE HYDRAULIC ASS'Y ADR/2&4	B18572	1.000	EA	2			.0		
.2	0012	00619795	PLUG SQ HD 1.25" NPT BRASS	A19795 (M)	1.000	EA	4			.0		
.2	0001	00609274	PLUG PIPE BRASS 1 1/4" HYDRO		1.000	EA	4			.0		
.2	0013	00620212	RESERVOIR OIL ADR4	D620212 (C)	1.000	EA	1			.0		
..3	0001	00685162	VACUUM IMPREG 19V5M W/POLYESTR		1.000	EA	4			.0		
..3	0002	00620224	CASTING RESERVOIR OIL ADR4	CASTING	1.000	EA	3			.0		
.2	0014	00620213	GASKET OIL RESERVOIR 5.00X5.00	B20213	1.000	EA	9			.0		
..3	0001	16531	SHEET 0.062"THK VEG FIBER #681		25.000	IN	3			.0		
.2	0015	00620214	BOTTOM OIL RESERVOIR 5.000"L	C20214	1.000	EA	9			.0		
..3	0001	20219	ART 2.000X5.000" 6061-T6		.417	FT	3			.0		
.2	0016	00620215	GAUGE CHECK SE SIGHT 1.000"		2.000	EA	4			.0		
.2	0017	00[illegible]	RELIEF FITTING #47200		1.000	EA	4			.0		
.2	0018	00614935	SCREW HXHD CAP 3/8-16X2.500"		3.000	EA	4			.0		
.2	0019	00615029	WASHER FLAT PAP 0.375"ID ZP		2.000	EA	4			.0		
.2	0020	00620046	CYLINDER HYDRAULIC PARKER		1.000	EA	4			.0		
1	0082	00622959	CONTAINER EDIBLE OIL S#1A ADR2	C22959	1.000	EA	2			.0		
.2	0002	00614143	FITTING 1/4 HOSE X1/4NPT ELBOW		2.000	EA	4			.0		
.2	0003	00619781	COVER OIL CONTAINER ASSY	A19781	1.000	EA	1			.0		
..3	0001	00617103	COVER OIL CONTAINER ADR2	A17103	1.000	EA	4			.0		
..3	0002	00612873	HANDLE BALL E-25		1.000	EA	4			.0		
..3	0003	00615027	WASHER FLAT SAE 0.250" STL ZP		1.000	EA	4			.0		
..3	0004	00613781	SCREW HXHD CAP 1/4-20X0.625"		1.000	EA	4			.0		
.2	0004	00622961	VALVE CONTROL OIL CONTAINER	A22961	2.000	EA	2			.0		

PARENT ITEM NO. 00613235 DESCRIPTION MAIN ASS'Y ADR/2S QTY 1 ITEM TYPE 1 LOW LEVEL 00
ENGR DRAW E15233 (UNIGHT UNIT MEAS EA
STANDARD BATCH QUANTITY 1.000

RELATIVE LEVEL	SEQ NO.	COMPONENT ITEM NO.	DESCRIPTION	ENGINEERING DRAWING NUMBER	QUANTITY PER	ITEM UM	TYP	OPT NO.	FIRST DP SEQ	LT ADJ	EFFECTIVE DATES FROM	TO
.2	0001	00689025	VALVE LAB COCK ASAH1 1/4 MNPT		2.000	EA	4			.0		
.2	0005	00622962	SCREW METERING OIL CONTAINER	A22962	2.000	EA	2			.0		
..3	0001	00684385	SCREW HXHD CAP 5/16-18X1.0"NAT		2.000	EA	4			.0		
.2	0006	00622971	CONTAINER OIL ADR2 SER-1A	B22971	1.000	EA	4			.0		
.2	0007	00613184	KNOB KNURLED SKA-3		4.000	EA	4			.0		
.2	0008	00613241	TUBING 1/4"OD NO E-43-0500		5.000	FT	4			.0		
.2	0009	00624207	RATCHET BELT TENSIONR ASY ADR2	D24207	1.000	EA	1			.0		
.2	0003	00684350	KNOB BALL 1"D 1/4-20 #B-3		1.000	EA	4			.0		
.2	0004	00684351	SCREW FH HXSOC 1/2-13X3.250"		2.000	EA	4			.0		
.2	0005	00685756	SCREW FH HXSOC 8-32X0.375"		6.000	EA	4			.0		
.2	0006	00686616	PIN ROLL 3/16 DIAX1.250"		1.000	EA	4			.0		
.2	0008	00612175	WASHER FLAT 0.500"ID ZP		4.000	EA	4			.0		
.2	0007	00612198	NUT HX 1/4-19 GR5 ZP		2.000	EA	4			.0		
.2	0010	00612357	SCREW HXHD CAP 5/16-18X0.750"		6.000	EA	4			.0		
.2	0011	00612264	WASHER FLAT USS 0.312" ID ZP		2.000	EA	4			.0		
.2	0012	00612850	WASHER SPLIT LOCK 1/2"ID ZP		6.000	EA	4			.0		
.2	0014	00613201	SPRING COMPRESS LC-038-E-13		1.000	EA	4			.0		
.2	0015	00613934	WASHER SPLIT LOCK 3/4" ZP		6.000	EA	4			.0		
.2	0016	00615028	WASHER FLAT SAE 0.312" ID ZP		4.000	EA	4			.0		
.2	0018	00616784	SCREW SHOULDER HXSOC L= 0.750"		1.000	EA	4			.0		
.2	0019	00618345	HANDLE BALL B-22		1.000	EA	4			.0		
.2	0020	00624522	CHANNEL RACK RIGHT & LEFT SET	B624522	1.000	ST	4			.0		
.2	0021	00624523	SUPPORT ROLLER WELDMENT	B2452300	1.000	EA	9			.0		
..3	0001	12098	CDF 0.250" X 1.250" C1018		.344	FT	3			.0		
..3	0002	15203	CDF 0.500X1.250" C1018		.105	FT	3			.0		
..3	0022	00624524	ROLLER RATCHET ASY	C24524	1.000	EA	1			.0		
...3	0001	00624891	HUB HANDLE RATCHET ASS'Y	A624891(C)	1.000	EA	2			.0		
...4	0001	00624910	CFR 2.000X 1.000" LG C1018		1.000	EA	3			.0		
...4	0002	13194	CFR 0.250" C1018		.053	FT	3			.0		
...3	0002	00684349	GEAR SPUR S1240 0.750"KWASS 14		2.000	EA	4			.0		
...3	0003	00610000	SCREW HXHD CAP 1/4-20X0.750"		4.000	EA	4			.0		
...3	0004	00612381	BEARING PILLOW BLK LFB 0.750"		2.000	EA	4			.0		
...3	0007	00612929	WASHER SPLIT LOCK 1/4 STL ZP		4.000	EA	4			.0		
..3	0008	00615027	WASHER FLAT SAE 0.250" STL ZP		4.000	EA	4			.0		
..3	0009	00794124	SHAFT BELT RATCHET ADR2	B794124 (C)	1.000	EA	2			.0		
...4	0001	13521	SR 0.750" SS 304		2.084	FT	3			.0		
...3	0010	00624771	TUBE ROLLER ASS'Y ADR2	A24771	1.000	EA	2			.0		
...4	0001	00684663	BEARING ROLL END CAT # 14166S		2.000	EA	4			.0		
...4	0002	0062575001	TUBE ROLLER 12 5/8"L ADR 2	A2575001(M)	1.000	EA	2			.0		
....5	0001	06061	RMT 1.750X0.065" (16GA) C1010		1.053	FT	3			.0		
..3	0011	00612360	KEY STOCK 1/4 SQ CF C1035		.250	FT	4			.0		
..3	0012	0068144001	HANDLE & ADJ MECHANISM POS 72	B68144001 (C)	1.000	EA	2			.0		
..3	0013	00613184	KNOB KNURLED SKA-3		1.000	EA	4			.0		
..3	0023	00624526	ROLLER TENSION ASS'Y ADR2	B24526 (M)	1.000	EA	2			.0		
..3	0001	00686650	BEARING ROLLER DELRIN 1.625"OD		2.000	EA	4			.0		
..3	0002	12245	CFR 0.500" C1018		1.204	FT	3			.0		
..3	3	00619109	ROLLER IDLER L=13.000" TENSN	A19109	1.000	EA	2			.0		

PARENT IT NO. DESCRIPTION MAIN ASS'Y ADR/2C
00412[illegible] ENGR DRAW'E [illegible] (M) SPE[illegible] QTY 1 ITEM TYPE 1 LOW LEVEL 00
STANDARD BATCH QUANTITY 1.000 UNIT MEAS EA

RELATIVE LEVEL	SEQ NO.	COMPONENT ITEM NO.	DESCRIPTION	ENGINEERING DRAWING NUMBER	QUANTITY PER	ITEM UM	OPT TYP	FIRST NO. OP SEQ	LT ADJ	EFFECTIVE DATES FROM	TO
..4		0001 06061	RMT 1.750X0.065" (16GA) C1010		1.083	FT	3		.0		
2		0024 00624528	RACK OPER SIDE WELDMENT ADR2	A24528 (M)	1.000	EA	4		.0		
2		0025 00624529	RACK DRIVE SIDE WELDMENT ADR2	A24529 (M)	1.000	EA	4		.0		
.2		0027 00624531	BRACKET PAWL 1.500"L	A24531	1.000	EA	9		.0		
..3		0001 15852	LB 1.500" X 1.500" X 0.250"		.105	FT	3		.0		
2		0028 00624532	ROD THD 1/4-20 LG 5.750"	A24532	1.000	EA	2		.0		
..3		0001 18110	ROD THD 1/4-20 ZP		1.479	FT	3		.0		
2		0029 00624533	ROLLER IDLER ASS'Y	B24533	1.000	EA	2		.0		
..3		0001 00680060	BEARING ROLLER DELRIN 1.625"OD		2.000	EA	4		.0		
..3		0002 12245	CFR 0.500" C1018		1.500	FT	3		.0		
..3		0003 00612314	COLLAR ID 0.500 C-050		2.000	EA	4		.0		
2		0004 00619109	ROLLER IDLER L=13.000" TENSN	A19109	1.000	EA	2		.0		
..4		0001 06061	RMT 1.750X0.065" (16GA) C1010		1.083	FT	3		.0		
2		0030 00624490701	PAWL RATCHET WELD ADR2	B2490701(C)ADR	1.000	EA	9		.0		
..3		0001 12071	CDF 0.500" X 0.750" C1018		.417	FT	3		.0		
..3		0002 12095	CDF 0.250" X 0.750" C1018		.136	FT	3		.0		
1		0084 00624736	OIL CATCH PAN WELDMENT ADR2	C24736 (M)	1.000	EA	9		.0		
2		0002 12084	CRS 0.048" (18GA)		.474	LB	3		.0		
2		0003 12320	CFR 0.313" C1018		.563	FT	3		.0		
2		0004 11108	CDF 0.125" X 0.750" C1018		.125	FT	3		.0		
1		0085 00624737	OIL CATCH PAN WELDMENT ADR2	C24737	1.000	EA	4		.0		
1		0086 00625343	DUSTER FLOUR ASY ADR2 EXTERNAL	D25343	1.000	EA	1		.0		
.2		0001 00613881	SCREW HXHD CAP 3/8-16X3.000"		2.000	EA	4		.0		
2		0002 00612147	WASHER FLAT .375 USS ZP		2.000	EA	4		.0		
2		0003 00614070	WASHER SPLIT LOCK 3/8 ZP		1.000	EA	4		.0		
2		0004 00584549	SCREW SET HXSOC 1/4-20X0.250"		2.000	EA	4		.0		
.2		0005 00612423	WELDMENT DIVIDER FLOUR	A12423	1.000	EA	4		.0		
.2		0006 00625352	ROD MOUNT FLOUR DSTR 8.000"L	A625352 (C)	2.000	EA	2		.0		
..3		0001 13921	SR 0.750" SS 304		1.334	FT	3		.0		
2		0007 00612422	SHAFT FLOUR DUSTER 16.250"L	B12422 (M)	1.000	EA	2		.0		
..3		0001 13921	SR 0.750" SS 304		1.355	FT	3		.0		
2		0008 00612848	RING RETAINING 5108-75 S-PP		2.000	EA	4		.0		
.2		0009 00615850	PLUNGER BALL W-18-N		1.000	EA	4		.0		
.2		0010 00612420	KNOB ENGAGEMENT 1.500"L	A12420	1.000	EA	4		.0		
.2		0011 00612135	NUT HEX 1/4-20 FINISHED STL ZP		2.000	EA	4		.0		
2		0012 00612774	CONN ROD FLOUR DUSTER DRIVE	D12774	1.000	EA	2		.0		
..3		0001 12267	ROD THD 5/8-2A ZP		.771	FT	3		.0		
2		0013 00612433	KNOB KNURLED DK-10		1.000	EA	4		.0		
.2		0014 00628538	FLOUR DUSTR ADJ ADR2 SPLIT BLT	C28538	1.000	EA	9		.0		
..3		0001 00628827	COVER BOTTOM ADR2 FLOUR DUSTR	B28827 (M)	1.000	EA	3		.0		
..3		0002 00628822	PLATE SIDE ADR2 FLOUR DUSTER	A28822	2.000	EA	3		.0		
2		0003 00628821	SUPPORT ROLLER ADR2 FLOUR DSTR	B28821 (M)	2.000	EA	2		.0		
..4		0001 06347	SS 0.075" (14GA) 304 #3 FINISH PAPER COV 1SD		.022	LB	3		.0		
..3		0004 00817266	SCREW HXHD CAP 10-24X0.500"		4.000	EA	4		.0		
..3		0005 00817225	WASHER FLAT NR 10 ZP		4.000	EA	4		.0		
..3		0006 00685774	WASHER LOCK NR 10 ZP		4.000	EA	4		.0		
.2		0015 00612427	BUSHING BEARING CB 1216-11		1.000	EA	4		.0		

PARENT ITEM NO. DESCRIPTION MAIN ASS/Y ADR/2C QTY 1 ITEM TYPE 1 LOW LEVEL 00
0041223 ENGR DRAW E13223 (M)SHT UNIT MEAS EA
STANDARD BATCH QUANTITY 1.000

RELATIVE LEVEL	SEQ NO.	COMPONENT ITEM NO.	DESCRIPTION	ENGINEERING DRAWING NUMBER	QUANTITY PER	ITEM UM	TYP	OPT NO.	FIRST OP SEQ	LT ADJ	EFFECTIVE DATES FROM	TO
.2	0016	00612429	BUSHING BEARING PL 77-8 NL		2.000	EA	4			.0		
.2	0017	00610623	COLLAR ID 0.750 C-075		1.000	EA	4			.0		
.2	0018	00625344	LEVER DRIVE ADR2 FLOUR DUSTER	A25344	1.000	EA	1			.0		
..3	0001	0062100100022	CASTING LEVER DRIVE	CASTING	1.000	EA	3			.0		
..3	0003	12421	CFR 1.750" C1018		.115	FT	3			.0		
..3	0004	15473	CDF 0.313X1.000" C1018		.219	FT	3			.0		
.2	0019	00613037	SCREW SET HXSOC 5/16-18X0.250"		4.000	EA	4			.0		
.2	0020	00612414	DUSTER FLOUR ADR2 2/4	C12414	1.000	EA	2			.0		
..3	0001	00612415	CASTING DUSTER FLOUR	CASTING	1.000	EA	3			.0		
..3	0002	00684389	SCREW RH SLOTT 8-32X0.250" SS		6.000	EA	4			.0		
..3	0003	00612429	PLATE BOTTOM DUST	A12429	1.000	EA	3			.0		
.2	0021	00625345	LEVER PIVOT WELDMENT ADR2 DBTR	A25345C	1.000	EA	1			.0		
..3	0001	00684496	COLLAR SPLIT ID 2.000 2-PIECE		1.000	EA	9			.0		
..3	0002	12273	CDF 0.375" X 1.500" C1018		.584	FT	3			.0		
.2	0022	00612282	BEARING ROD END RF-8C (CFHB-8)		2.000	EA	4			.0		
.2	0023	00612431	SCREW CARRIAGE 3/8-16X1.250"		1.000	EA	4			.0		
.2	0024	00613182	SCREW SHOULDER HXSOC L= 0.750"		1.000	EA	4			.0		
.2	0025	00612166	NUT HEX 3/8-16 GR5 ZP		1.000	EA	4			.0		
.2	0026	00612410	SCREW SET HXSOC 1/4-20X0.250"		2.000	EA	4			.0		
.2	0027	00627856	DUAL CONVEYOR ASS'Y ADR-2	E27856	1.000	EA	2			.0		
..3	0001	00627843	PRIMARY CONVY BD7ADR2 SPLT BLT	D627843 (C)	1.000	EA	4			.0		
..3	0002	00612800	PLATE GUIDE UPPER RH ADR,VDR,	A612800 (C)	2.000	EA	9			.0		
...3	0001	12319	SS 0.075" (14GA) 304 #2B		.626	LB	3			.0		
..3	0003	00612801	PLATE GUIDE UPPER LH ADR,VDR,	A612801 (C)	2.000	EA	4			.0		
..3	0004	00613178	PLATE GUIDE LOWER 1/100"	A613178(C)	4.000	EA	1			.0		
..3	0001	00796200	SF 0.188" X 3" SS 304		.128	FT	3			.0		
.2	0005	00684333	SCREW HXHD CAP 8-32X0.500"		8.000	EA	4			.0		
.2	0006	00689279	WASHER FLAT NR 6 ZP		8.000	EA	4			.0		
.2	0007	00689280	WASHER LOCK NR 6 ZP		8.000	EA	4			.0		
.2	0008	00612381	BEARING PILLOW BLK LFB 0.750"		2.000	EA	4			.0		
.2	0009	00611772	SCREW HXHD CAP 5/16-18X2.750"		4.000	EA	4			.0		
.2	0010	00679050	WASHER FLAT PL 5/16"ST		8.000	EA	9			.0		
.2	0011	00679060	WASHER LOCK PL 5/16" ST		8.000	EA	9			.0		
.2	0012	00627844	SECONDARY CONVEYOR ADR2	C27844	1.000	EA	2			.0		
..3	0001	12027	CRS 0.075" (14GA)		4.269	LB	3			.0		
..3	0002	13165	CDF 1.000X2.500" C1018		.500	FT	3			.0		
..3	0013	0062702000008	BELT SS LACED 7'4.25"X12"W		1.000	EA	4			.0		
..3	0015	00612798	SCRAPER FLOUR SUB ASS'Y	C12798	1.000	EA	9			.0		
...3	0001	00613172	PLATE SIDE L= 8.250"	A13172	2.000	EA	2			.0		
....4	0001	12156	CDF 0.500X1.000" C1018		1.374	FT	3			.0		
...3	0002	00613173	SR 0.500X16.000"	C12798	2.000	EA	1			.0		
....4	0001	13174	SR 0.500" 5033 (AN-CD)		5.334	FT	3			.0		
..3	0016	0041025	KNOB ASY SKA 11		2.000	EA	4			.0		
..3	0017	00613143	NUT KNURLED KN-3		4.000	EA	4			.0		
.2	0018	0061796302	MOUNT ROLLER SHAFT DISCHARGE	A61796302(C)	4.000	EA	2			.0		
..3	0001	00796001	COLLAR SHAFT SS .5" BORE 1" OD		4.000	EA	4			.0		
..3	2	00795999	ROD THD 5/8-11 SS 18-8 COARSE		1.336	FT	3			.0		

PARENT ITEM NO. 00615233 DESCRIPTION MAIN ASS'Y ADR/2C QTY 1 ITEM TYPE 1 LOW LEVEL 00
ENGR DRAW E15233 (M)-SHT
STANDARD BATCH QUANTITY 1.000 UNIT MEAS EA

RELATIVE LEVEL	SEQ NO.	COMPONENT ITEM NO.	DESCRIPTION	ENGINEERING DRAWING NUMBER	QUANTITY PER	ITEM UM	ITEM TYP	OPT NO.	FIRST OP SEQ	LT ADJ	EFFECTIVE DATES FROM	TO
.2	0019	00617958	ROLLER 1.419 A45 W49 BL-13 250"	B17958	2.000	EA	4			.0		
.2	0020	00628520	COVER PISTON ARM	B28520	1.000	EA	4			.0		
.2	0021	00613781	SCREW HXHD CAP 1/4-20X0.625"		2.000	EA	4			.0		
.2	0022	00610000	SCREW HXHD CAP 1/4-20X0.750"		4.000	EA	4			.0		
.2	0023	00615027	WASHER FLAT SAE 0.250" STL ZP		4.000	EA	4			.0		
.2	0024	00614680	WASHER LOCK 0.250 ID ZP		4.000	EA	4			.0		
.2	0025	00627840	BRACKET CONVEYOR REST	B27840 (M)	2.000	EA	2			.0		
.3	0001	15874	LB 2.500X1.500X0.250" A36		8.000	FT	3			.0		
.2	0026	00689937	SPROCKET 40BS17HT 1.000"KW		1.000	EA	4			.0		
.2	0027	00610483	CHAIN ANSI 40 RIV 1/2"		2.750	FT	4			.0		
.2	0028	00689367	SPROCKET 40BS15HT 0.750"KW&SS		1.000	EA	4			.0		
.2	0032	00613388	SCREW HXHD CAP 5/16-18X0.500"		4.000	EA	4			.0		
.2	0033	00627839	CONVEY DRV ROLL/ADR2 SPLIT BELT	B27839	1.000	EA	2			.0		
.3	0001	15047	CFR 2.000" C1018		1.710	FT	3			.0		
.2	0038	00612314	COLLAR ID 0.500" C-050		1.000	EA	4			.0		
.2	0039	0062702000007	BELT ENDL 12' L X 12" W		1.000	EA	4			.0		
.2	0040	29281	IDLER ROLLER ASSEMBLY	B29281	1.000	EA	2			.0		
.3	0001	29280	SHAFT CONVEYOR IDLER	B29280	1.000	EA	2			.0		
...4	0001	12245	CFR 0.500" C1018		1.104	FT	3			.0		
...4	0002	00612314	COLLAR ID 0.500" C-050		2.000	EA	4			.0		
...4	0003	00617711	ROLLER BELT RETURN 2.000"L	A17711	2.000	EA	2			.0		
...4	0001	19712	UHMW POLYETHYLENE 1.750" DIA		.334	FT	3			.0		
..3	0004	00615027	WASHER FLAT SAE 0.250" STL ZP		1.000	EA	4			.0		
..3	0005	00614680	WASHER LOCK 0.250 ID ZP		1.000	EA	4			.0		
..3	0006	00613783	SCREW HXHD CAP 1/4-20X0.875"		1.000	EA	4			.0		
..3	0041	29419	PRIMARY CONVEYOR ADJUST. ASSY	C29419 (M)	1.000	EA	1			.0		
..3	0001	29413	ADJUSTING BRACKET WLDMT. ADR2	B29413 (M)	1.000	EA	2			.0		
...4	0001	12883	CDF 0.125X1.000" C1018		.396	FT	3			.0		
...4	0002	12112	CFR 1.000" C1018		.042	FT	3			.0		
...4	0003	00686560	SCREW SHOULDER HXSOC L= 0.500"		2.000	EA	4			.0		
...4	0003	00626878	SHAFT 5/8 DIA X 15 FILE C1018	C29419.43	1.000	EA	2			.0		
...4	0001	12252	CFR 0.625" C1018		1.292	FT	3			.0		
...4	0004	00626876	HANDLE ADJ. BRACKET WLDMNT ADR	C26876 (M)	1.000	EA	2			.0		
...4	0001	12883	CDF 0.125X1.000" C1018		.396	FT	3			.0		
...4	0002	12112	CFR 1.000" C1018		.084	FT	3			.0		
...4	0003	12148	CFR 0.375" C1018		.417	FT	3			.0		
...4	0005	00689302	BUSHING BEARING FF709-07		2.000	EA	4			.0		
...4	0006	29412	MOUNTING BRACKET	B29412	2.000	EA	1			.0		
...4	0001	12883	CDF 0.125X1.000" C1018		.416	FT	3			.0		
..3	0007	00614498	HANDLE BALL B-31		1.000	EA	4			.0		
..3	0008	00626875	ROLLER LIFTING PRIM.CONVYR.ADR	A26875 (M)	2.000	EA	2			.0		
...4	0001	04905	DELRIN ROUND 1.125"		.116	FT	3			.0		
...4	0009	00617002	PIN ROLL 5/16 DIAX1.000"		2.000	EA	4			.0		
...4	0042	00616976	RIVET PH 3/16DIAX7/8 LONG		2.000	EA	4			.0		
.2	0043	00615142	SCREW EYE CE 82 EB		4.000	EA	4			.0		
.2	0044	00629621	ROLLER ASS'Y PRIM CONV ADR2	B29621	1.000	EA	1			.0		
..3	0001	12245	CFR 0.500" C1018		1.230	FT	3			.0		

PARENT ITEM NO. 00613233 DESCRIPTION MAIN ASS'Y ADR/2C
ENGR DRAW E13233 (M) SHT
STANDARD BATCH QUANTITY 1.000
QTY 1 ITEM TYPE 1 LOW LEVEL 00
UNIT MEAS EA

RELATIVE LEVEL	SEQ NO.	COMPONENT ITEM NO.	DESCRIPTION	ENGINEERING DRAWING NUMBER	QUANTITY PER	ITEM UM	TYP	OPT NO.	FIRST OP SEQ	LT ADJ	EFFECTIVE DATES FROM	TO
.3	0002	00629619	RMT 1.000X.048 (180A) C1018		1.042	FT	3			.0		
.3	0003	00629620	BEARING ROLL END 81OD .5 DELRN		2.000	EA	4			.0		
.2	0045	00614478	HANDLE BALL B 31		1.000	EA	4			.0		
.2	0047	00684304	SCREW FH HXSOC 10-32X0.500"		4.000	EA	4			.0		
.2	0050	00612153	NUT HEX FINISHED 1/2-13 GR5 ZP		2.000	EA	4			.0		
.2	0051	00612848	RING RETAINING 5100-75 S FP		2.000	EA	4			.0		
.2	0088	00610602	LINK OFFSET CHAIN ANSI 40-2		1.000	EA	4			.0		
.2	0089	00610603	LINK CONN CHAIN ANSI 40-2		1.000	EA	4			.0		
.2	0095	00795677	KIT PLUG LOCKOUT CAN/TAG/LOCK		1.000	EA	9			.0		
.2	0001	00795700	LOCKOUT PLUG YELLOW W/LABEL		1.000	EA	4			.0		
.2	0002	00795701	TAG LOCKOUT		1.000	EA	4			.0		
.2	0003	00795702	PADLOCK LOCKOUT RED MASTER		1.000	EA	4			.0		
.2	0099	00624180	PISTON & LINER ASSEMBLY ADR2 C24180		1.000	EA	9			.0		
.2	0001	00625649	PLATE MT L= 2.000" A25649		1.000	EA	9			.0		
..3	0001	12037	CDF 0.375" X 2.000" C1018		.167	FT	3			.0		
.2	0002	00624178	ROLLER MEAS PISTON L= 0.625" A24178		1.000	EA	2			.0		
..3	0001	04059	ROD DRILL 1.625" CF OH		.053	FT	3			.0		
.2	0003	00615716	RING RETAINING GH-62 STPA		2.000	EA	4			.0		
.2	0004	00625312	PLATE MT L= 1.500" A25312		1.000	EA	9			.0		
..3	0001	16817	CDF 0.313X2.000" C1018		.125	FT	3			.0		
.2	0005	00612969	SCREW SET HXSOC 1/4-20X0.375"		2.000	EA	4			.0		
.2	0006	00613016	SCREW HXSOC 1/4-20X1.000"		2.000	EA	4			.0		
.2	0007	00624179	SHAFT ROLLER 5.312"L A24179		1.000	EA	2			.0		
..3	0001	12252	CFR 0.625" C1018		.143	FT	3			.0		
.2	0008	00624175	LINER MEAS PSTN ADR2 1-20OZ C24175		1.000	EA	2			.0		
..3	0001	00385540	HELICOIL 3/8-16 THD		1.000	EA	2			.0		
..3	0002	00624241	LINER MEAS PSTN ADR2 L= 5.000" C24175 (M)		1.000	EA	2			.0		
...4	0001	04241	FLAT 2.500X5.000" DELRIN WHITE 500 OIL ANNL		.525	FT	3			.0		
.2	0009	00624176	PISTON MEAS ADR2 1-20 OZ B24176		2.000	EA	9			.0		
..3	0001	04242	ROUND 2.000" DELRIN WH		1.314	FT	3			.0		
.2	0010	00613386	SCREW FH HXSOC 1/4-20X0.750"		4.000	EA	4			.0		
.2	0101	00797138	ROUNDING UNIT VARI SPEED ASSY D797138 (C)		1.000	EA	2			.0		
.2	0001	00615991	ARM ROUND SPEED ADJUST ADR2 C15991		1.000	EA	2			.0		
..3	0001	006159920000A	CASTING ARM ROUND SPEED ADJUST CASTING		1.000	EA	3			.0		
.2	0002	00616100	ROD ADJUST ROUND SPD 36.000"L A616100 (C)		1.000	EA	2			.0		
..3	0001	12244	CFR 0.750" C1018		3.000	FT	3			.0		
.2	0003	00612381	BEARING PILLOW BLK LPE 0.750"		1.000	EA	4			.0		
.2	0004	00616101	HANDWHEEL SPEED ADJUST A16101 (M)		1.000	EA	1			.0		
..3	0002	00683472	KNOB W/HANDLE		1.000	EA	4			.0		
.2	0005	00610623	COLLAR ID 0.750 C-075		3.000	EA	4			.0		
.2	0006	00615993	NUT ROUND SPEED ADJ 2.250"L A615993 (C)		1.000	EA	2			.0		
..3	0001	12944	CFR 1.500" C1018		.188	FT	3			.0		
.2	0007	00616098	ROLLER IDLER 2.175" ADR NDR A616098 (C)		1.000	EA	2			.0		
..3	0001	13750	RMT 2.000X0.312" C1018		.178	FT	3			.0		
.2	0008	00618097	BEARING BALL 99R12 3/4 2RS		2.000	EA	4			.0		
.2	0009	00613609	WASHER SUPPORT 5900-74		1.000	EA	4			.0		
.2	0010	00616096	SCREW SHOULDER HXSOC L= 2.250"		1.000	EA	4			.0		
.2	0011	00613826	SCREW SHOULDER HXSOC L= 1.250"		1.000	EA	4			.0		
.2	0012	00614747	CLAMP TUBE 5121-12-7		2.000	EA	4			.0		
.2	0013	00797198	COVER DRIVE 12.5" X 20.5" ADR2 B797198(C)		1.000	EA	4			.0		

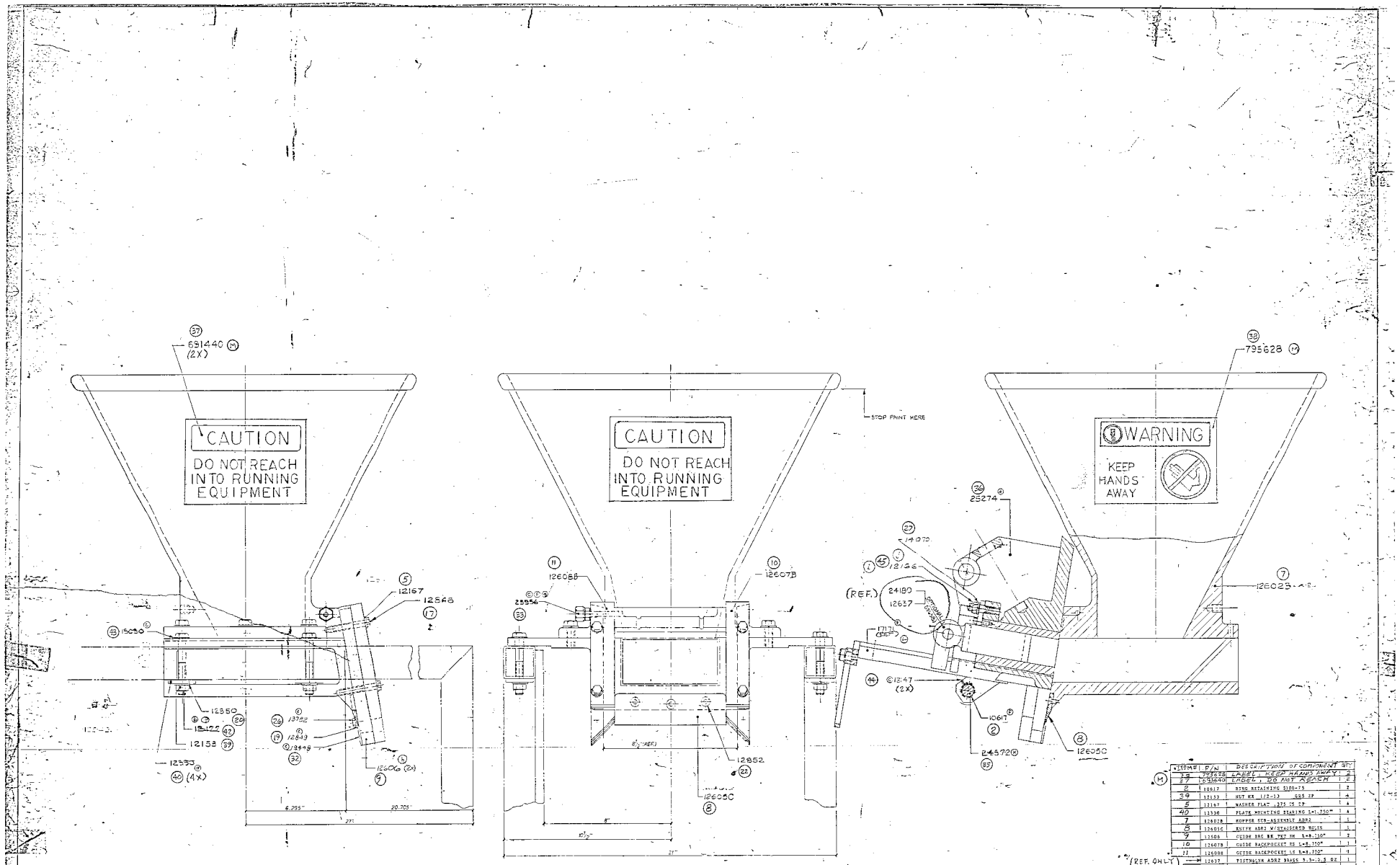

ITEM	P/N	DESCRIPTION OF COMPONENT	QTY
37	691440	LABEL, KEEP HANDS AWAY	2
27	691440	LABEL, DO NOT REACH	2
2	10617	RING RETAINING S100-75	2
39	12133	NUT HX 1/2-13 GR5 ZP	4
5	12167	WASHER FLAT .375 IS ZP	4
40	12330	PLATE MOUNTING BEARING L=1.750"	4
7	126023	HOPPER SUB-ASSEMBLY ADR2	1
8	126010	KNIFE ADR2 W/STAGGERED REGIS	1
9	12586	GUIDE BRG BR YET SM L=8.150"	2
10	126078	GUIDE BACKPOCKET RH L=8.750"	1
11	126088	GUIDE BACKPOCKET LH L=8.750"	1
—	12637	TRITHALON ADR2 BRACE 5.3-5.5 OZ	1
41	12661	GEAR BEVEL SP25123 1.625"	1
17	12846	SCREW HEXD CAP 1/8-16X2.250"	1
20	12859	WASHER SPLIT LOCK 1/2" IS ZP	1
22	12853	SCREW FH HEXDC 1/4-20X0.500"	3
42	13122	SCREW HEXD CAP 1/2-13X1.750"	4
26	13722	SCREW HEXD CAP 1/4-20X0.500"	2
27	13070	WASHER SPLIT LOCK 3/8 IS	1
23	13030	WASHER FLAT SAE 0.380"ID IS	2
32	196429	QUICK OIL CATCH L=2.210"	2
33	25956	CONNECTOR MALE HOSE (REWORK)	1
—	24180	PISTOLGUN ADR2PLASTIC 3.5-4.5 OZ. AND 18.0-19.0 OZ.	1
35	25372	SLAFT JOINT ROD ADR2 L=8.187"	1
36	25274	BACKPOCKET SUB-ASSY ADR2"	1
14	12849	WASHER FLAT .75 O ZP	2

(M) REF. ONLY OPTION

(M) REF. ONLY OPTION

h	041997	ITEM	QTY.	DESCRIPTION	MATERIAL	SIZE
g	062584	SCALE	1:2	"2 POCKET DIVIDER-ROLLINGER		
c	110192	DWN. BY	DS			
d	120198	DATE	10-10-78	HOPPER WITH BACKPOCKET ASSY		
d	051082	CHK.				
L	110389	DATE				
k	021984					
j	101083					
i	102583					

M1319.99

EQUIPMENT CORP.
801 INDUSTRIAL WAY WEST
EATONTOWN, N. J. 07724

DWG. NO. 12501
SHEET 1 OF 1
12501 A

THIS DRAWING IS THE PROPERTY OF ACME EQUIPMENT CORP. AND AS SUCH TO RETURN IT FOR SCRAPPING. IT IS NOT TO BE RE-PRODUCED IN WHOLE OR PART OR USED FOR OTHER PURPOSES, WE RESERVE THE RIGHT TO MAKE DESIGN OR MEASUREMENT CHANGES.

ADAMATIC (Item# 8)

INDENTED BILL

DATE 8/08/01 TIME 16.31.10 PAGE 1 AMEF72

PARENT ITEM NO.
006126010000A

DESCRIPTION HOPPER W/BACKPOCKET ASY ADR2
ENGR DRAW E12601A
STANDARD BATCH QUANTITY 1.000

QTY 1 ITEM TYPE 2 LOW LEVEL 01
UNIT MEAS EA

RELATIVE LEVEL	SEQ NO.	COMPONENT ITEM NO.	DESCRIPTION	ENGINEERING DRAWING NUMBER	QUANTITY PER	ITEM UM	TYP	OPT NO.	FIRST OP SEQ	LT ADJ	EFFECTIVE DATES FROM	TO
1	0002	00610617	RING RETAINING SH-75 STPA 25PC		2.000	EA	4			.0		
1	0005	00612167	WASHER FLAT .375 USS ZP		4.000	EA	4			.0		
1	0007	006126020000B	HOPPER SUB ASS'Y ADR2	E12602B	1.000	EA	2			.0		
.2	0001	00612603	HOPPER LOWER HALF ADR2	E12603	1.000	EA	2			.0		
..3	0001	00612646	CASTING HOPPER LOWER HALF	CASTING	1.000	EA	3			.0		
.2	0002	00612604	HOPPER UPPER HALF ADR2	E12604 (M)	1.000	EA	2			.0		
..3	0001	00612647	CASTING HOPPER UPPER HALF	CASTING	1.000	EA	3			.0		
.2	0003	00612854	SCREW HXHD CAP 1/2-13 X 1.250"		6.000	EA	4			.0		
.2	0004	00612855	PIN DOWEL 3/8 DIAX1.250"		2.000	EA	4			.0		
.2	0006	00612175	WASHER FLAT 0.500"ID ZP		6.000	EA	4			.0		
1	0008	006126050000C	KNIFE ADR2 W/STAGGERED HOLES	B12605C (M)	1.000	EA	9			.0		
.2	0002	15678	CDF 0.250X2.000" B&S		.623	FT	3			.0		
1	0009	00612606	GUIDE BRG BK PKT RH 8.750"L	B12606	2.000	EA	9			.0		
.2	0002	00612146	CDSQ 0.750" C1018		2.920	FT	3			.0		
1	0010	006126070000B	GUIDE BACKPOCKET RS 8.750"L	B12607B	1.000	EA	9			.0		
.2	0002	12857	CDF 0.750" X 1.500" C1018		.766	FT	3			.0		
1	0011	006126080000B	GUIDE BACKPOCKET LS 8.750"L	B12608B	1.000	EA	9			.0		
.2	0002	12857	CDF 0.750" X 1.500" C1018		.766	FT	3			.0		
1	0017	00612846	SCREW HXHD CAP 3/8-16 X 2.250"		4.000	EA	4			.0		
1	0018	00612848	RING RETAINING 5108-75 S-PP		2.000	EA	4			.0		
1	0019	00612849	WASHER FLAT 0.250"USS ZP		4.000	EA	4			.0		
1	0020	00612850	WASHER SPLIT LOCK 1/2"ID ZP		4.000	EA	4			.0		
1	0021	00612851	SCREW HXHD CAP 1/4-20 X 2.000"		2.000	EA	4			.0		
1	0022	00612852	SCREW FH HXSOC 1/4-20X0.500"		3.000	EA	4			.0		
1	0026	00613782	SCREW HXHD CAP 1/4-20X0.500"		2.000	EA	4			.0		
1	0027	00614070	WASHER SPLIT LOCK 3/8 ZP		1.000	EA	4			.0		
1	0032	00619449	GUIDE OIL CATCH 2.250"L	A19449	2.000	EA	4			.0		
1	0033	00612853	CONNECTOR MALE #P4MC2		1.000	EA	4			.0		
1	0035	00624572	SHAFT CONN ROD ADR2 8.187"L	A24572	1.000	EA	2			.0		
.2	0001	12244	CFR 0.750" C1018		.685	FT	3			.0		
1	0036	00625274	BACKPOCKET SUB ASS'Y ADR2	D25274	1.000	EA	2			.0		
.2	0001	00625275	BACKPOCKET ADR2	D25275	1.000	EA	2			.0		
..3	0001	00612643	CASTING BACKPOCKET	CASTING	1.000	EA	3			.0		
.2	0002	0061263101	BASE BACKPOCKET ADR2	C61263101	1.000	EA	3			.0		
.2	0003	00624573	GUIDE CONN ROD ADR2 L= 8.000"	B24573	2.000	EA	2			.0		
..3	0001	12353	CDF 0.500X1.500" C1018		1.334	FT	3			.0		
.2	0004	00685787	PIN ROLL 1/4 DIAX1.000"		2.000	EA	4			.0		
.2	0005	00612919	FITTING GREASE 29610 STRAIGHT		2.000	EA	4			.0		
.2	0006	00612908	SCREW SET HXSOC 3/8-16X1.500"		1.000	EA	4			.0		
.2	0007	00616918	SCREW FH HXSOC 5/16-18X1.500"		2.000	EA	4			.0		
.2	0008	00612894	SCREW FH HXSOC CAP ALLOY		2.000	EA	4			.0		
.2	0011	00793741	NUT FLANGE 3/8X16 BLACK STEEL		1.000	EA	4			.0		
1	0037	00691440	LABEL CAUTION EMED QS3018		2.000	EA	4			.0		
1	0038	00795628	LABEL "KEEP HANDS AWAY" #17463		2.000	EA	4			.0		
1	0039	00612153	NUT HEX FINISHED 1/2-13 GR5 ZP		4.000	EA	4			.0		
1	0040	00612330	PLATE MT BEARING 1.750"L	A12330(M)	4.000	EA	2			.0		
.2	0001	16828	CDF 0.250" X 1.750" C1018		5.836	FT	3			.0		

PARENT ITEM NO. 006126010000A

DESCRIPTION HOPPER W/BACKPOCKET ASY ADR2 QTY 1 ITEM TYPE 2 LOW LEVEL 01
ENGR DRAW E12601A UNIT MEAS EA
STANDARD BATCH QUANTITY 1.000

RELATIVE LEVEL	SEQ NO.	COMPONENT ITEM NO.	DESCRIPTION	ENGINEERING DRAWING NUMBER	QUANTITY PER	ITEM UM	TYP	OPT NO.	FIRST OP SEQ	LT ADJ	EFFECTIVE DATES FROM	TO
1	0042	00613122	SCREW HXHD CAP 1/2-13X3.750"		4.000	EA	4			.0		
1	0043	00615030	WASHER FLAT SAE 0.500" ID ZP		4.000	EA	4			.0		
1	0044	00613147	SCREW SET HXSOC 1/4-20X0.500"		2.000	EA	4			.0		
1	0045	00612166	NUT HEX 3/8-16 GR5 ZP		1.000	EA	4			.0		

ADAMATIC (Item #10) INDENTED BILL DATE 12/03/01 TIME 10.50.13 PAGE 1 AMEF72

PARENT ITEM NO. 00612648 | DESCRIPTION ROUNDING UNIT ASSY ADR2 | QTY 1 | ITEM TYPE 1 | LOW LEVEL 01
ENGR DRAW E12648 | UNIT MEAS EA
STANDARD BATCH QUANTITY 1.000

RELATIVE LEVEL	SEQ NO.	COMPONENT ITEM NO.	DESCRIPTION	ENGINEERING DRAWING NUMBER	QUANTITY PER	ITEM UM	ITEM TYP	OPT NO.	FIRST OP SEQ	LT ADJ	EFFECTIVE DATES FROM	TO
	0002	00612190	BEARING FLANGE SFT16 1.000"		2.000	EA	4			.0		
	0003	00612254	NUT HX 7/16-14 GR5 ZP		4.000	EA	4			.0		
	0004	00612284	SCREW HXHD CAP 3/8-16X1.250"		3.000	EA	4			.0		
	0006	006126500000B	GEAR SPUR C10160/"OD" ADR2.VDR	C12650B (M)	1.000	EA	4			.0		
	0015	006126700000A	COVER ROUNDING DRUM	D12670	1.000	EA	2			.0		
2	0001	00612949	CASTING COVER ROUNDING DRUM	CASTING	1.000	EA	3			.0		
	0022	00612744	GEAR SPUR S1045 1.000" W/KW &	B612744(C)ADRBK	1.000	EA	4			.0		
	0026	00612901	BEARING BALL 6016-2RS-NR C/3		1.000	EA	4			.0		
	0030	00612907	BEARING BALL 6018 ZZNR		1.000	EA	4			.0		
	0034	00612930	ROUNDING UNIT SUB ASSY ADR2	E12648 (REF)	1.000	EA	1			.0		
2	0001	00684384	SCREW FH HXSOC 1/2-13X0.750"		1.000	EA	4			.0		
2	0003	00611165	UNION BRASS # 3250X2		2.000	EA	4			.0		
2	0004	00611261	NIPPLE BRASS 3325X2		2.000	EA	4			.0		
2	0005	00611262	ELBOW BRASS STREET # 3400X2		2.000	EA	4			.0		
2	0008	006126490000D	HUB MOULDING UNIT	E12649D	1.000	EA	1			.0		
.3	0001	00612931	CASTING HUB ROUNDING UNIT	CASTING	1.000	EA	3			.0		
2	0013	006126530000C	BEARING INNER RECIPR SUB ASS'Y	B12653C	1.000	EA	1			.0		
.3	0002	006126550000A	BUSHING BEARING BRONZE #12655A	B12655	1.000	EA	4			.0		
.3	0003	006179310000A	BEARING INNER RECIPR	D17931A	1.000	EA	2			.0		
.4	0001	00612934	CASTING BRG INNER RECIPR ADR	CASTING (NO DWG	1.000	EA	3			.0		
.3	0004	00686161	WIPER J-3500		1.000	EA	4			.0		
.3	0005	00685770	SCREW SET HXSOC 8-32X0.375"		2.000	EA	4			.0		
.3	0006	00628684	SCREW FH HXSOC 1/4-20X3.000"		1.000	EA	4			.0		
.3	0007	00614680	WASHER LOCK 0.250 ID ZP		1.000	EA	4			.0		
.3	0008	00612135	NUT HEX 1/4-20 FINISHED STL ZP		1.000	EA	4			.0		
	0014	00612656	SHAFT CONN ROD 3.500"L	A12656	1.000	EA	2			.0		
.3	0001	06562	ROD DRILL 1.000" CF OH		.292	FT	3			.0		
2	0015	00612658	CRANK PLATE	D12[illegible]	1.000	EA	4			.0		
2	0016	00612659	CLAMP DISC 0.218"L [illegible].VDR.ND	A612659 (C)	1.000	EA	2			.0		
.3	0001	12378	[illegible] C1018		.019	FT	3			.0		
	0018	006126600000D	SHAFT BEVEL GEAR 1.875"L	A12660	1.000	EA	4			.0		
	0023	00612676	ROD CONN SUB ASS'Y	B12676	1.000	EA	1			.0		
.3	0001	00612657	ROD CONNECTING MOULDING UNIT	D12657	1.000	EA	2			.0		
.4	0002	00612936	CASTING ROD CONN	CASTING	1.000	EA	3			.0		
3	0002	00612958	BUSHING BEARING P102-6 ADR2		2.000	EA	4			.0		
	0024	00612677	BEARING OUTER RECIPR SUB ASS'Y	B12677	1.000	EA	2			.0		
3	0001	00612943	CASTING BRG OUTER RECIPR	CASTING	1.000	EA	3			.0		
2	0003	00617930	BEARING OUTER RECIPR	C17930	1.000	EA	4			.0		
	0025	00612902	NUT BEARING BH 07		1.000	EA	4			.0		
	0027	00612911	SCREW FH HXSOC 1/4-20X0.625"		9.000	EA	4			.0		
	0029	00612915	BEARING BALL 6005-2RS		3.000	EA	4			.0		
	0032	00612920	RING RETAINING HO1-243 STPA		1.000	EA	4			.0		
	0035	00612924	CAP SPHERCO BRG	B12924	1.000	EA	4			.0		
	0036	00612929	WASHER SPLIT LOCK 1/4" STL ZP		2.000	EA	4			.0		
	0037	00613386	SCREW FH HXSOC 1/4-20X0.750"		1.000	EA	4			.0		
	0038	00613532	RING BEARING HOLDING 0.562"L	A13532 (M)	1.000	EA	2			.0		
3	0001	13531	RMT 3.000" X 0.188" C1018		.047	FT	3			.0		

PARENT ITEM NO. 00612648 — DESCRIPTION ROUNDING UNIT ASSY ADR2 — QTY 1 — ITEM TYPE 1 — LOW LEVEL 01
ENGR DRAW E12648 — UNIT MEAS EA
STANDARD BATCH QUANTITY 1.000

RELATIVE LEVEL	SEQ NO.	COMPONENT ITEM NO.	DESCRIPTION	ENGINEERING DRAWING NUMBER	QUANTITY PER	ITEM UM	ITEM TYP	OPT NO.	FIRST OP SEQ	LT ADJ	EFFECTIVE DATES FROM	TO
.2	0039	00613642	SCREW FH HXSOC 3/8-16X0.750"		1.000	EA	4			.0		
.2	0040	00613662	SCREW FH HXSOC 10-24X0.500"		3.000	EA	4			.0		
.2	0041	00614258	NUT HX 1/2-20 WASHER-FACED		9.000	EA	4			.0		
.2	0042	00614745	BEARING SPHERCO COM 14 ROD END		1.000	EA	4			.0		
.2	0043	00619504	KEY LOCATION DRUM WELDMENT	A19504 (M)	1.000	EA	2			.0		
.3	0001	22240	CDSQ 0.437		.209	FT	3			.0		
.3	0002	13628	CFR 0.437" C1018		.073	FT	3			.0		
.2	0044	006126520000D	SHAFT ROUNDING UNIT 26.812"L	D12652D (M)	1.000	EA	4			.0		
.2	0045	006126650000C	ROD TIE 11.875"L	B12665C	3.000	EA	2			.0		
..3	0001	13198	ROD THD 1/2-20 ZP		9.351	FT	3			.0		
.2	0046	00612667	PLATE MT 0.375"L	A12667	3.000	EA	1			.0		
.3	0001	06082	CFR 1.437" C1018		.297	FT	3			.0		
.2	0047	00612668	DRUM INNER SUB ASS'Y ADR2	D12668 (M)	1.000	EA	1			.0		
.3	0002	00612669	DRUM INNER L=11.375"	D12669	1.000	EA	4			.0		
.3	0003	00612945	COVER INNER DRUM 36"X 12"W	D12668	1.000	EA	2			.0		
..4	0001	00612947	BELTING RFT 3PL PYRAM 12"W		2.942	FT	4			.0		
.3	0005	00613505	RIVET FEMALE PART 9012-1861		16.000	EA	4			.0		
.3	0006	00613506	RIVET MALE PART 9012-1911		16.000	EA	4			.0		
.2	0048	00612903	NUT BEARING BH 16		1.000	EA	4			.0		
.2	0049	00612904	BEARING BALL 6007-2RS		2.000	EA	4			.0		
.2	0050	00612912	NUT ELASTIC STOP 3/8-16 9/16		3.000	EA	4			.0		
.2	0051	00612916	RING RETAINING 5008-187		1.000	EA	4			.0		
.2	0052	00612919	FITTING GREASE 29610 STRAIGHT		2.000	EA	4			.0		
.2	0053	00686161	WIPER J-3500		1.000	EA	4			.0		
.2	0054	0069138201	GEAR SET ROUNDING UNIT ADR	B69138201(C)	1.000	EA	9			.0		
.3	0001	00617108	GEAR BEVEL 5P25R25	C17108	1.000	EA	4			.0		
.3	0002	00612681	GEAR BEVEL 5P25L25 1.625"	C12661	1.000	EA	4			.0		
.2	0055	00796838	CLAMP DISC SPHERICAL BEARING	A79683B(C)	1.000	EA	2			.0		
.3	0001	12112	CFR 1.000" C1018		.021	FT	3			.0		
.2	0056	00796841	SCREW DISC SPECIAL BEARING	A796841(C)	1.000	EA	2			.0		
.3	0001	00796840	SCREW FLHD HXSOC 1/-13 X 1.00		1.000	EA	4			.0		
.2	0057	00614128	LOCK RING #RFN-7012-1.25"BORE		1.000	EA	4			.0		
.2	0058	00611165	UNION BRASS # 3250X2		2.000	EA	4			.0		
.2	0059	00684669	HOSE GREASE 12"L #10-212		1.000	EA	4			.0		
.2	0060	00612904	BEARING BALL 6007-2RS		1.000	EA	4			.0		
.2	0035	00612766	SCREW FH HXSOC 1/4-28X1.250"		8.000	EA	4			.0		
.2	0036	00612967	NUT HEX 1-8 FINISHED STL ZP		1.000	EA	4			.0		
.2	0037	00613037	SCREW SET HXSOC 5/16-18X0.250"		2.000	EA	4			.0		
.2	0038	00612770	PIN DOWEL 3/8 DIAX2.250"		1.000	EA	4			.0		
.2	0039	00612360	KEY STOCK 1/4 SQ CF C1035		.157	FT	4			.0		
.2	0041	00613148	SCREW SET HXSOC 3/8-16X0.750"		1.000	EA	4			.0		
.2	0043	00613774	SCREW HXHD CAP 1/4-20X0.375"		1.000	EA	4			.0		
.2	0044	00613781	SCREW HXHD CAP 1/4-20X0.625"		2.000	EA	4			.0		
.2	0045	00613888	SCREW HXHD CAP 7/16-14X1.500"		4.000	EA	4			.0		
.2	0046	00614011	WASHER SPLIT LOCK 7/16ID ZP		4.000	EA	4			.0		
.2	0047	00614042	BUSHING TAPERLOCK BORE 3.375"		1.000	EA	4			.0		
.2	0050	00615156	BUSHING TAPERLOCK BORE 1.250"		1.000	EA	4			.0		

PARENT ITEM NO. 00612648
DESCRIPTION ROUNDING UNIT ASSY ADR2
ENGR DRAW E12648
STANDARD BATCH QUANTITY 1.000
QTY 1 ITEM TYPE 1 LOW LEVEL 01
UNIT MEAS EA

RELATIVE LEVEL	SEQ NO.	COMPONENT ITEM NO.	DESCRIPTION	ENGINEERING DRAWING NUMBER	QUANTITY PER	ITEM UM	TYP	OPT NO.	OP SEQ	FIRST	LT ADJ	EFFECTIVE DATES FROM	TO
	0052	0061267101	HANDWHEEL ROUND ADR2	A1267101(M)	1.000	EA	2				.0		
2	0001	00796418	HANDLE ROUND DISHED ADR/2		1.000	EA	4				.0		
	0053	00612682000A	SHAFT BRUSH 22.875"L	B12682A	1.000	EA	4				.0		
	0054	00615622	PULLEY V BELT SHEAVE		1.000	EA	4				.0		
	0055	00689400	BELT V B- 63 HI POWER		1.000	EA	4				.0		

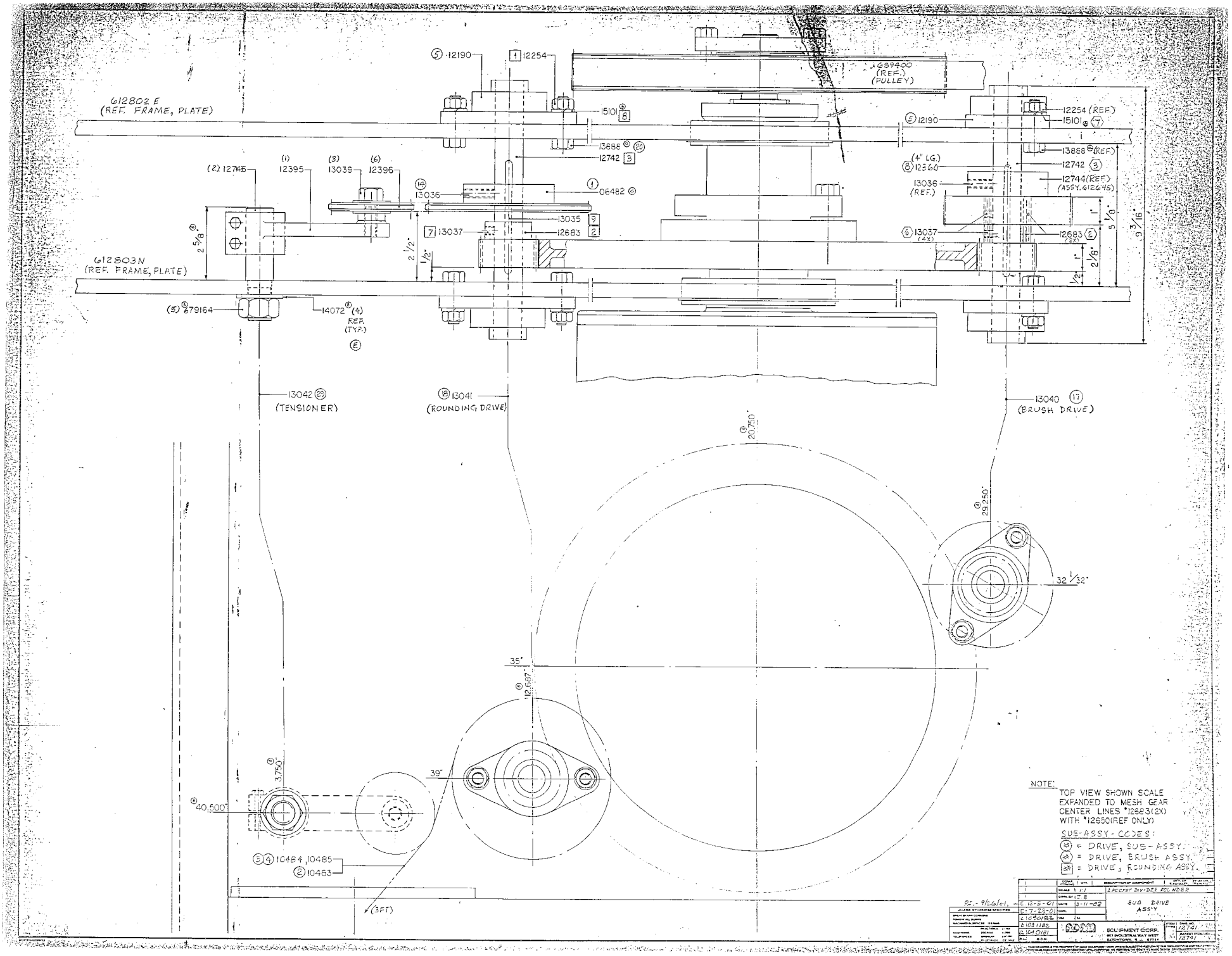
612802 E
(REF. FRAME, PLATE)
612803N
(REF. FRAME, PLATE)
(5) 12190
1 12254
15101 8
13888 (REF)
12742 3
(2) 12746
(1) 12395
(3) 13039
(6) 12396
13036
1 06482
13035 9
7 13037
12683 2
(5) 79164
14072 (4)
REF. (TYP.)
E
689400
(REF.)
(PULLEY)
12254 (REF)
15101 7
(5) 12190
13888 (REF)
(4" LG.)
8 12360
12742 3
13036
(REF.)
12744 (REF)
(ASSY. 612648)
6 13037
(4X)
12693 2
(2X)
2 5/8"
2 1/2"
1/2"
1"
5 1/8"
9 3/16"
2 1/8"
1/2"
13042 25
(TENSIONER)
18 13041
(ROUNDING DRIVE)
13040 17
(BRUSH DRIVE)
20.750"
29.250"
32 1/32"
35"
12.587"
39"
3.750"
40.500"
(3FT)
3 4 10484, 10485
2 10483
NOTE:
TOP VIEW SHOWN SCALE EXPANDED TO MESH GEAR CENTER LINES "12663(2X) WITH "12650(REF ONLY)
SUB-ASSY-CODES:
25 = DRIVE, SUB-ASSY.
24 = DRIVE, BRUSH ASSY.
23 = DRIVE, ROUNDING ASSY.
SUB DRIVE ASS'Y
ECUIPMENT CORP.
12741

ADAMATIC (Item #12) INDENTED BILL DATE 12/03/01 TIME 13.33.57 PAGE 1 AMEF72

PARENT ITEM NO. 00612741

DESCRIPTION DRIVE SUB ASY ADR2
ENGR DRAW E12741
STANDARD BATCH QUANTITY 1.000

QTY 1 ITEM TYPE 2 LOW LEVEL 01
UNIT MEAS EA

RELATIVE LEVEL	SEQ NO.	COMPONENT ITEM NO.	DESCRIPTION	ENGINEERING DRAWING NUMBER	QUANTITY PER	ITEM UM	TYP	OPT NO.	FIRST OP SEQ	LT ADJ	EFFECTIVE DATES FROM	TO
	0001	00686482	SPROCKET 40BTB36 SINGLE TAPER		1.000	EA	4			.0		
	0002	00610483	CHAIN ANSI 40 RIV 1/2"		3.000	FT	4			.0		
	0003	00610484	LINK OFFSET CHAIN ANSI 40		1.000	EA	4			.0		
	0004	00610485	CHAIN LINK CONN ANSI 40		1.000	EA	4			.0		
	0005	00612190	BEARING FLANGE SFT16 1.000"		4.000	EA	4			.0		
	0017	00613040	DRIVE BRUSH SUB ASY ADR2	E12741 (M)RED.	1.000	EA	2			.0		
2	0001	00612254	NUT HX 7/16-14 GR5 ZP		4.000	EA	4			.0		
2	0002	00612683	GEAR SPUR S 1020 1.000"KW&SS	A12683 (M)	2.000	EA	4			.0		
2	0003	00612742	SHAFT SUB DRIVE 9.375"L	B12742	1.000	EA	1			.0		
.3	0001	12112	CFR 1.000" C1018		.781	FT	3			.0		
2	0006	00613037	SCREW SET HXSOC 5/16-18X0.250"		4.000	EA	4			.0		
2	0007	00615101	WASHER LOCK 0.437"ID ZP		4.000	EA	4			.0		
2	0008	00612360	KEY STOCK 1/4 SQ CF C1035		.334	FT	4			.0		
	0018	00613041	DRIVE ROUNDING SUB ASY ADR2	E12741 (M)	1.000	EA	2			.0		
2	0002	00612683	GEAR SPUR S 1020 1.000"KW&SS	A12683 (M)	1.000	EA	4			.0		
2	0003	00612742	SHAFT SUB DRIVE 9.375"L	B12742	1.000	EA	1			.0		
.3	0001	12112	CFR 1.000" C1018		.781	FT	3			.0		
2	0007	00613037	SCREW SET HXSOC 5/16-18X0.250"		2.000	EA	4			.0		
2	0008	00615101	WASHER LOCK 0.437"ID ZP		4.000	EA	4			.0		
2	0009	00613035	KEY SQUARE 1/4" L= 4.000"		1.000	EA	4			.0		
	0020	00613888	SCREW HXHD CAP 7/16-14X1.500"		4.000	EA	4			.0		
	0029	00613042	TENSIONR 1S ASY&PTN202-06-01MD	E12741 (M)	1.000	EA	2			.0		
2	0001	00612395	TENSIONER DRIVE 8SM-4		1.000	EA	4			.0		
2	0002	00612746	PIN MOUNT IDLER 4.000"L	A12746	1.000	EA	4			.0		
2	0003	00613039	TAPBOLT HXHD 1/2-13X1.250"		1.000	EA	4			.0		
2	0004	00614072	WASHER FLAT USS .875" ID ZP		1.000	EA	4			.0		
2	0005	00679164	NUT HEX 7/8-9 SS		1.000	EA	4			.0		
2	0006	00612396	SPROCKET IDLER 104 BORE 1/2"		1.000	EA	4			.0		

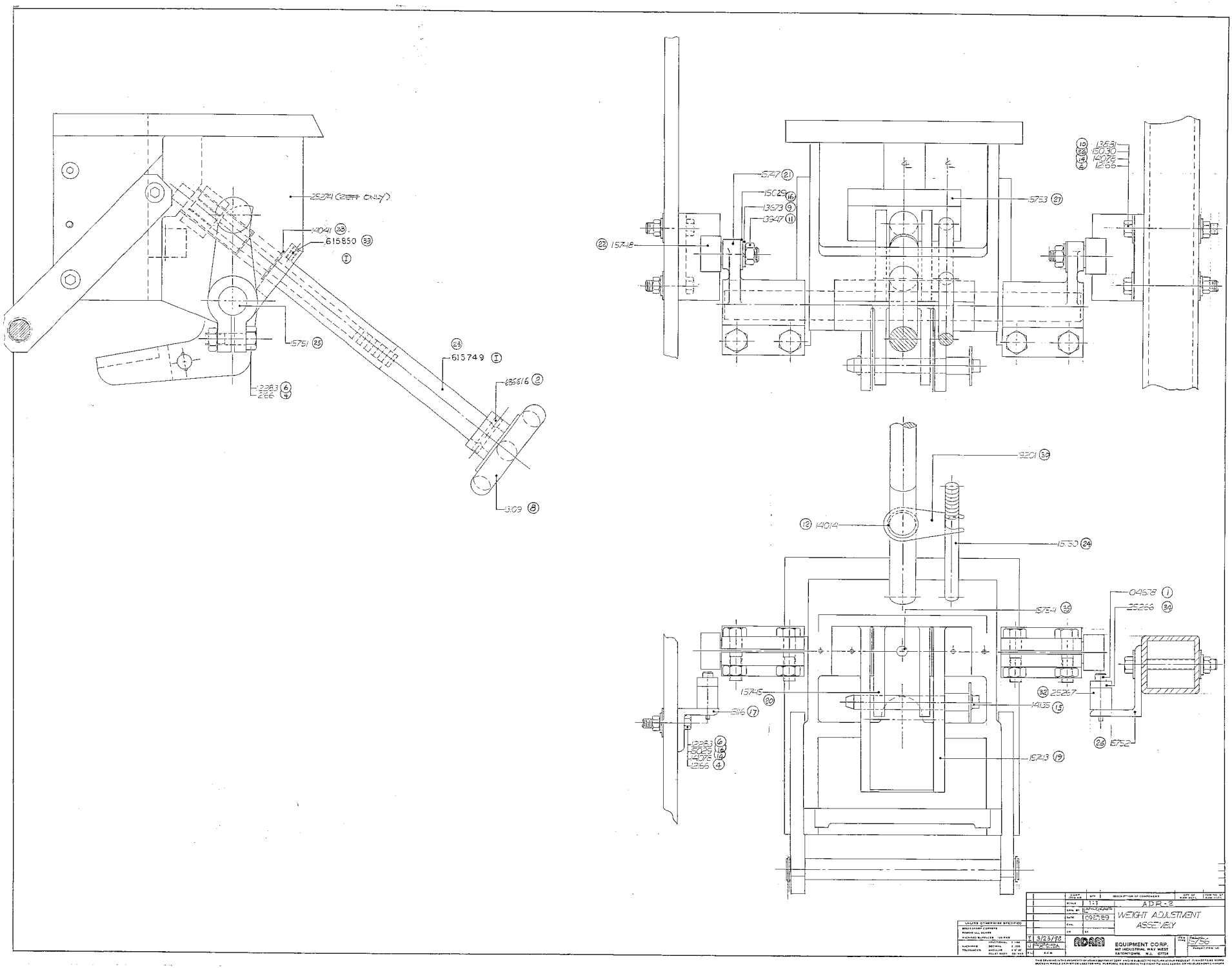
25274 (REF ONLY)
14041 (33)
615850 (33)
(I)
15751 (23)
(23)
615749 (I)
686616 (2)
12263 (6)
2266 (4)
3109 (8)
15217 (21)
15029 (16)
13573 (9)
13547 (11)
(22) 15748
15753 (27)
(10) 13551
(14) 15030
14076
12266
9201 (30)
(12) 14014
15750 (24)
04678 (1)
25266 (34)
15754 (34)
15745 (20)
(32) 25267
14135 (13)
5116 (17)
(26) 15752
12263 (6)
15029 (16)
14076 (14)
12266 (4)
15213 (19)
ADR-2
WEIGHT ADJUSTMENT ASSEMBLY
1:1
10/25/89
T 3/23/90
ADAM EQUIPMENT CORP.
901 INDUSTRIAL WAY WEST
EATONTOWN, N.J. 07724
15756

ADAMATIC (Item #52)

INDENTED BILL

DATE 8/08/01 TIME 16.33.42 PAGE 1 AMEF72

PARENT ITEM NO.
00615756

DESCRIPTION WEIGHT ADJUSTMT ASY ADR2
ENGR DRAW E15756
STANDARD BATCH QUANTITY 1.000

QTY 1 ITEM TYPE 1 LOW LEVEL 01
UNIT MEAS EA

RELATIVE LEVEL	SEQ NO.	COMPONENT ITEM NO.	DESCRIPTION	ENGINEERING DRAWING NUMBER	QUANTITY PER	ITEM UM	TYP	OPT NO.	FIRST OP SEQ	LT ADJ	EFFECTIVE DATES FROM	TO
1	0001	00684678	SCREW SHOULDER HXSOC L= 1.000"		2.000	EA	4			.0		
1	0002	00686616	PIN ROLL 3/16 DIAX1.250"		1.000	EA	4			.0		
1	0004	00612166	NUT HEX 3/8-16 GR5 ZP		4.000	EA	4			.0		
1	0005	00612167	WASHER FLAT .375 USS ZP		8.000	EA	4			.0		
1	0006	00612283	SCREW HXHD CAP 3/8-16X1.500"		4.000	EA	4			.0		
1	0008	00613109	HANDWHEEL WEIGHT ADJUST	A13109	1.000	EA	2			.0		
.2	0001	00613110	KNOB 6 LOBE #29703 NO HANDLE		1.000	EA	4			.0		
1	0009	00613673	WASHER LOCK 0.500"ID ZP		2.000	EA	4			.0		
1	0010	00613881	SCREW HXHD CAP 3/8-16X3.000"		2.000	EA	4			.0		
1	0011	00613947	NUT HX 1/2-20 GR5 ZP		2.000	EA	4			.0		
1	0012	00614014	RING RETAINING 4100-100		3.000	EA	4			.0		
1	0014	00614078	WASHER LOCK 0.375"ID ZP		2.000	EA	4			.0		
1	0015	00614135	PIN SINGLE ACT CL8-ELF-B-3.14		1.000	EA	4			.0		
1	0016	00615029	WASHER FLAT SAE 0.375"ID ZP		4.000	EA	4			.0		
1	0017	00615116	ACTUATOR DISCHARGE ASS'Y ADR2	A15116	1.000	EA	2			.0		
.2	0001	00684678	SCREW SHOULDER HXSOC L= 1.000"		2.000	EA	4			.0		
.2	0002	00625266	BUMPER POLYURETHANE 3.000"L	A25266	1.000	EA	2			.0		
..3	0001	04567	PLSBAR 0.750X3.00"POLYURETHANE		.063	FT	3			.0		
.2	0003	00625267	PLATE STRIKER L= 3" ADR2	A25267 (M)	1.000	EA	2			.0		
..3	0001	00691737	CDF 0.3125X0.750" C1018		.250	FT	3			.0		
.2	0004	00625268	BRACKET ACTUATOR DISCHG L= 3"	A25268	1.000	EA	2			.0		
..3	0001	15852	LB 1.500" X 1.500" X 0.250"		.250	FT	3			.0		
1	0019	00615743	LEVER DISCHARGE	C15743	1.000	EA	1			.0		
.2	0001	00615742	CASTING LEVER DISCHARGE ADR2	CASTING	1.000	EA	3			.0		
1	0020	00615745	LEVER WEIGHT ADJUST ADR2	C15745	1.000	EA	2			.0		
.2	0001	00615744	CASTING LEVER WEIGHT ADJ ADR2	CASTING	1.000	EA	3			.0		
1	0021	00615747	LEVER PUSHOUT ADR2	C15747	2.000	EA	2			.0		
.2	0001	00615746	CASTING LEVER PUSH-OUT ADR2	CASTING	4.000	EA	3			.0		
1	0022	00615748	CAM FOLLOWER CF-1.25"		2.000	EA	4			.0		
1	0023	00615749	SHAFT WEIGHT ADJUST 14.375"L	B15749	1.000	EA	2			.0		
.2	0001	12112	CFR 1.000" C1018		1.198	FT	3			.0		
1	0024	00615750	INDICATOR WEIGHT ADJ 9.000"L	B15750	1.000	EA	2			.0		
.2	0001	12245	CFR 0.500" C1018		.750	FT	3			.0		
1	0025	00615751	SHAFT DISCHARGE LVR 13.250"L	A15751	1.000	EA	1			.0		
.2	0001	12112	CFR 1.000" C1018		1.104	FT	3			.0		
1	0026	00615752	ACTUATOR DISCHARGE ASS'Y ADR2	A15752	1.000	EA	2			.0		
.2	0001	00684678	SCREW SHOULDER HXSOC L= 1.000"		2.000	EA	4			.0		
.2	0002	00625266	BUMPER POLYURETHANE 3.000"L	A25266	1.000	EA	2			.0		
..3	0001	04567	PLSBAR 0.750X3.00"POLYURETHANE		.063	FT	3			.0		
.2	0003	00625267	PLATE STRIKER L= 3" ADR2	A25267 (M)	1.000	EA	2			.0		
..3	0001	00691737	CDF 0.3125X0.750" C1018		.250	FT	3			.0		
.2	0004	00625269	BRACKET ACTUATOR DISCHG L= 3"	A25269	1.000	EA	2			.0		
..3	0001	15974	LB 2.500X1.500X0.250" A36		.250	FT	3			.0		
1	0027	00615753	BLOCK WEIGHT ADJUST 4.500"L	B15753	1.000	EA	2			.0		
.2	0001	15851	CDF 1.000" X 1.500" C1018		.375	FT	3			.0		
1	0030	00619201	PLATE INDICATOR 2.625"L ADR2	A19201	1.000	EA	2			.0		
.2	0001	12022	CRS 0.060" (16GA) 24SF /80LB		.219	SF	3			.0		

PARENT ITEM NO. 00615756

DESCRIPTION WEIGHT ADJUSTMT ASY ADR2 QTY 1 ITEM TYPE 1 LOW LEVEL 01
ENGR DRAW E15756 UNIT MEAS EA
STANDARD BATCH QUANTITY 1.000

RELATIVE LEVEL	SEQ NO.	COMPONENT ITEM NO.	DESCRIPTION	ENGINEERING DRAWING NUMBER	QUANTITY PER	ITEM UM	TYP	OPT NO.	FIRST OP SEQ	LT ADJ	EFFECTIVE DATES FROM	TO
1	0032	00625267	PLATE STRIKER L= 3" ADR2	A25267 (M)	2.000	EA	2			.0		
.2	0001	00691737	CDF 0.3125X0.750" C1018		.500	FT	3			.0		
1	0033	00615850	PLUNGER BALL W-18-N		1.000	EA	4			.0		
1	0034	00625266	BUMPER POLYURETHANE 3.000"L	A25266	2.000	EA	2			.0		
.2	0001	04567	PLSBAR 0.750X3.00"POLYURETHANE		.126	FT	3			.0		
1	0035	00615754	PIN TAPER #6 X 1.750"		1.000	EA	4			.0		
1	0036	00615030	WASHER FLAT SAE 0.500" ID ZP		2.000	EA	4			.0		
1	0038	00614041	PIN LEVER MOUNT L= 4.562"		1.000	EA	2			.0		
.2	0001	12252	CFR 0.625" C1018		.380	FT	3			.0		

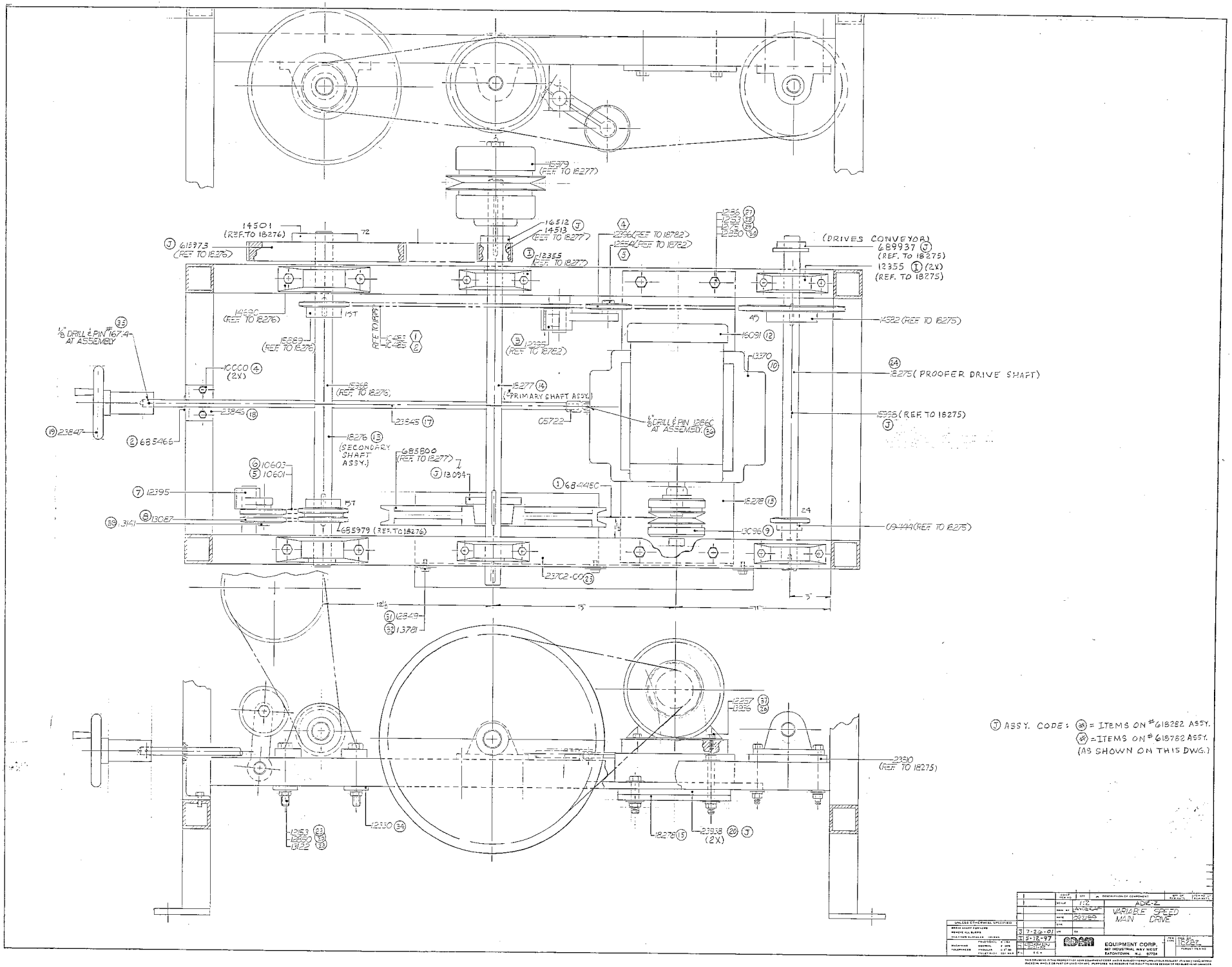

J ASSY. CODE: 36 = ITEMS ON #618282 ASSY.
37 = ITEMS ON #618782 ASSY.
(AS SHOWN ON THIS DWG.)

REV.	DATE	BY	DESCRIPTION OF COMPONENT	REV. BY	APPROVED

ADAMATIC (ITEM #55) INDENTED BILL DATE 12/04/01 TIME 9.26.48 PAGE 1 AMEF72

PARENT ITEM NO. 00618282
DESCRIPTION DRIVE MAIN ASY ADR2 W/VAR SPD
ENGR DRAW E18282 (M)
STANDARD BATCH QUANTITY 1.000
QTY 1 ITEM TYPE 2 LOW LEVEL 01
UNIT MEAS EA

RELATIVE LEVEL	SEQ NO.	COMPONENT ITEM NO.	DESCRIPTION	ENGINEERING DRAWING NUMBER	QUANTITY PER	ITEM UM	ITEM TYP	OPT NO.	FIRST OP SEQ	LT ADJ	EFFECTIVE DATES FROM	TO
	0001	00684480	BELT VAR SPEED 1922V630		1.000	EA	4			.0		
	0002	00685466	BUSHING BEARING 10C2-FF		1.000	EA	4			.0		
	0003	00685722	JOINT UNIVERSAL UJ-6 3/8"X3/8"		1.000	EA	4			.0		
	0004	00610000	SCREW HXHD CAP 1/4-20X0.750"		2.000	EA	4			.0		
	0005	00610601	CHAIN ANSI 40-2 RIV 1/2"		3.000	FT	4			.0		
	0006	00610605	LINK CONN CHAIN ANSI 40-2		1.000	EA	4			.0		
	0007	00612395	TENSIONER DRIVE 8SM-4		1.000	EA	4			.0		
	0008	00613087	SPROCKET IDLER 204 BORE 1/2"		1.000	EA	4			.0		
	0009	00613096	PULLEY VAR SPEED #1270 0.875"		1.000	EA	4			.0		
	0010	00613370	BASE VARIABLE SPEED		1.000	EA	4			.0		
	0011	00616089	BELT TIMING 480H100		1.000	EA	4			.0		
	0012	00616091	MOTOR TEFC 1.50HP1140 208-230/		1.000	EA	4			.0		
	0013	00618276	SHAFT V S DR SECOND ASY ADR2	C18276 (M)	1.000	EA	2			.0		
	0001	00685979	SPROCKET D40B15 AS 1.250"KW&SS		1.000	EA	4			.0		
	0002	00612330	PLATE MT BEARING 1.750"L	A12330(M)	1.000	EA	2			.0		
.3	0001	16828	CDF 0.250" X 1.750" C1018		1.459	FT	3			.0		
2	0003	00614690	BEARING PILLOW BLK NP 20 1.250		2.000	EA	4			.0		
2	0004	00615889	SPROCKET 40BS15HT 1.250"		1.000	EA	4			.0		
2	0005	00615968	SHAFT DRIVE SECOND 23.000"L	B15968	1.000	EA	2			.0		
3	0001	12378	CFR 1.250" C1018		1.917	FT	3			.0		
2	0006	00612360	KEY STOCK 1/4 SQ CF C1035		.438	FT	4			.0		
2	0007	00613391	SCREW HXHD CAP 3/8-16X0.750"		1.000	EA	4			.0		
2	0008	00614078	WASHER LOCK 0.375"ID ZP		1.000	EA	4			.0		
	0009	00613151	WASHER FENDER ID 3/8 OD 1.5 ZP		1.000	EA	4			.0		
	0010	00615973	PULLEY TIMINGBELT 72H100 SF		1.000	EA	4			.0		
	0011	00614501	BUSHING TAPERLOCK BORE 1.250"		1.000	EA	4			.0		
	0014	00618277	SHAFT V S DR PRIMARY ASY ADR2	C18277 (M)	1.000	EA	2			.0		
2	0001	00685800	PULLEY VS DRIVEN SHEAVE		1.000	EA	4			.0		
2	0002	00613094	BUSHING TAPERLOCK BORE 1.000"		1.000	EA	4			.0		
	0003	00612355	BEARING PILLOW BLK NP 16 1"		2.000	EA	4			.0		
3	0005	00615978	SHAFT PRIMARY DRIVE 28.500"L	B15978	1.000	EA	2			.0		
3	0001	12112	CFR 1.000" C1018		2.375	FT	3			.0		
2	0006	00615979	PULLEY VAR SPEED #167 1.000"		1.000	EA	4			.0		
2	0007	00614513	PULLEY TIMINGBELT 16H100 JA		1.000	EA	4			.0		
2	0008	00616512	BUSHING TAPERLOCK BORE 1.000"		1.000	EA	4			.0		
	0009	00612360	KEY STOCK 1/4 SQ CF C1035		.209	FT	4			.0		
	0010	00612360	KEY STOCK 1/4 SQ CF C1035		.375	FT	4			.0		
	0011	00612166	NUT HEX 3/8-16 GR5 ZP		4.000	EA	4			.0		
	0012	00613882	SCREW HXHD CAP 3/8-16 X 3.500"		4.000	EA	4			.0		
	0013	00614070	WASHER SPLIT LOCK 3/8 ZP		4.000	EA	4			.0		
	0014	00618268	PLATE MT 1.750"L ADR2	A18268 (M)	4.000	EA	2			.0		
	0001	16828	CDF 0.250" X 1.750" C1018		.584	FT	3			.0		
	0015	00616511	PULLEY TMGBELT ASY 16H100 PLY		1.000	EA	2			.0		
	0001	00614513	PULLEY TIMINGBELT 16H100 JA		1.000	EA	4			.0		
	0002	00616512	BUSHING TAPERLOCK BORE 1.000"		1.000	EA	4			.0		
	0015	00618278	PLATE MT VS DRIVE 20.500"L	C18278	1.000	EA	9			.0		
	0001	15987	CDF 0.375" X 8.000" C1018		1.139	FT	3			.0		

PARENT ITEM NO. 00618282 — DESCRIPTION DRIVE MAIN ASY ADR2 W/VAR SPD — QTY 1 — ITEM TYPE 2 — LOW LEVEL 01

ENGR DRAW E18282 (M) — UNIT MEAS EA

STANDARD BATCH QUANTITY 1.000

RELATIVE LEVEL	SEQ NO.	COMPONENT ITEM NO.	DESCRIPTION	ENGINEERING DRAWING NUMBER	QUANTITY PER	ITEM UM	TYP	OPT NO.	FIRST OP SEQ	LT ADJ	EFFECTIVE DATES FROM	TO
1	0016	00618782	DRIVE ADR2/PRFR DRV VAR SPEED	E18282	1.000	EA	2			.0		
.2	0001	00610483	CHAIN ANSI 40 RIV 1/2"		7.000	FT	4			.0		
.2	0002	00610485	CHAIN LINK CONN ANSI 40		1.000	EA	4			.0		
.2	0003	00612395	TENSIONER DRIVE BSM-4		1.000	EA	4			.0		
.2	0004	00612396	SPROCKET IDLER 104 BORE 1/2"		1.000	EA	4			.0		
.2	0005	00612854	SCREW HXHD CAP 1/2-13 X 1.250"		1.000	EA	4			.0		
1	0017	00623845	ROD EXTENSION 31.000"L CFR ADR	A23845 (M)	1.000	EA	2			.0		
.2	0001	12252	CFR 0.625" C1018		2.584	FT	3			.0		
	0018	00623846	BRACKET SUPPORT 2.500"L	B23846	1.000	EA	4			.0		
	0019	00623847	HANDWHEEL SPEED ADJUST	A23847	1.000	EA	4			.0		
	0020	00623938	SPACER PLATE MOUNT 8.000"L	A23938	2.000	EA	1			.0		
.2	0001	15138	CDF 0.375X1.750" C1018		1.334	FT	3			.0		
	0023	00612279	COLLAR ID 0.375 C-037		1.000	EA	4			.0		
	0024	00618275	SHAFT V S DR PROPER ASY ADR2	C18275 (M)	1.000	EA	1			.0		
.2	0001	00689444	SPROCKET 40B24 AB TL 1.000"		1.000	EA	4			.0		
.2	0002	00612355	BEARING PILLOW BLK NP 16 1"		2.000	EA	4			.0		
.2	0003	00614582	SPROCKET 40B45 TL ASY 1.000"		1.000	EA	4			.0		
.2	0004	00615998	SHAFT PROPER DRIVE 23.406"L	B15998	1.000	EA	2			.0		
.3	0001	12112	CFR 1.000" C1018		1.959	FT	3			.0		
.2	0006	00623810	SPACER VS DRIVE 5.500"L	A23810	2.000	EA	1			.0		
.3	0001	12553	CDF 0.500X1.500" C1018		.916	FT	3			.0		
.2	0007	00612360	KEY STOCK 1/4 SQ CF C1035		.355	FT	4			.0		
.2	0008	00689937	SPROCKET 40BS17HT 1.000"KW		1.000	EA	4			.0		
	0025	00623792	COVER VAR DRV PULLEY WELDMENT	G23792 (M)	1.000	EA	2			.0		
.2	0001	12022	CRS 0.060" (16GA) 24SF /80LB		1.688	SF	3			.0		
.2	0002	12022	CRS 0.060" (16GA) 24SF /80LB		.047	SF	3			.0		
.2	0003	12022	CRS 0.060" (16GA) 24SF /80LB		.521	SF	3			.0		
	0026	00613936	WASHER SPLIT LOCK 3/4" ZP		2.000	EA	4			.0		
	0027	00612186	SCREW HXHD CAP 1/2-13X3.500"		2.000	EA	4			.0		
	0028	00612153	NUT HEX FINISHED 1/2-13 GR5 ZP		4.000	EA	4			.0		
	0029	00612175	WASHER FLAT 0.500"ID ZP		2.000	EA	4			.0		
	0030	00612850	WASHER SPLIT LOCK 1/2"ID ZP		4.000	EA	4			.0		
	0031	00612849	WASHER FLAT 0.250"USS ZP		3.000	EA	4			.0		
	0032	00613781	SCREW HXHD CAP 1/4-20X0.625"		3.000	EA	4			.0		
	0033	00613122	SCREW HXHD CAP 1/2-13X3.750"		2.000	EA	4			.0		
	0034	00612330	PLATE MT BEARING 1.750"L	A12330(M)	1.000	EA	2			.0		
.2	0001	16828	CDF 0.250" X 1.750" C1018		1.459	FT	3			.0		
	0035	00616714	PIN DOWEL 1/8 DIAX1.750"		1.000	EA	4			.0		
	0036	00612860	PIN DOWEL 1/8 DIAX0.750"		1.000	EA	4			.0		
	0037	00612257	SCREW HXHD CAP 5/16-18X0.750"		2.000	EA	4			.0		
	0038	00613141	SCREW HXHD CAP 1/2-13X2.000"		1.000	EA	4			.0		

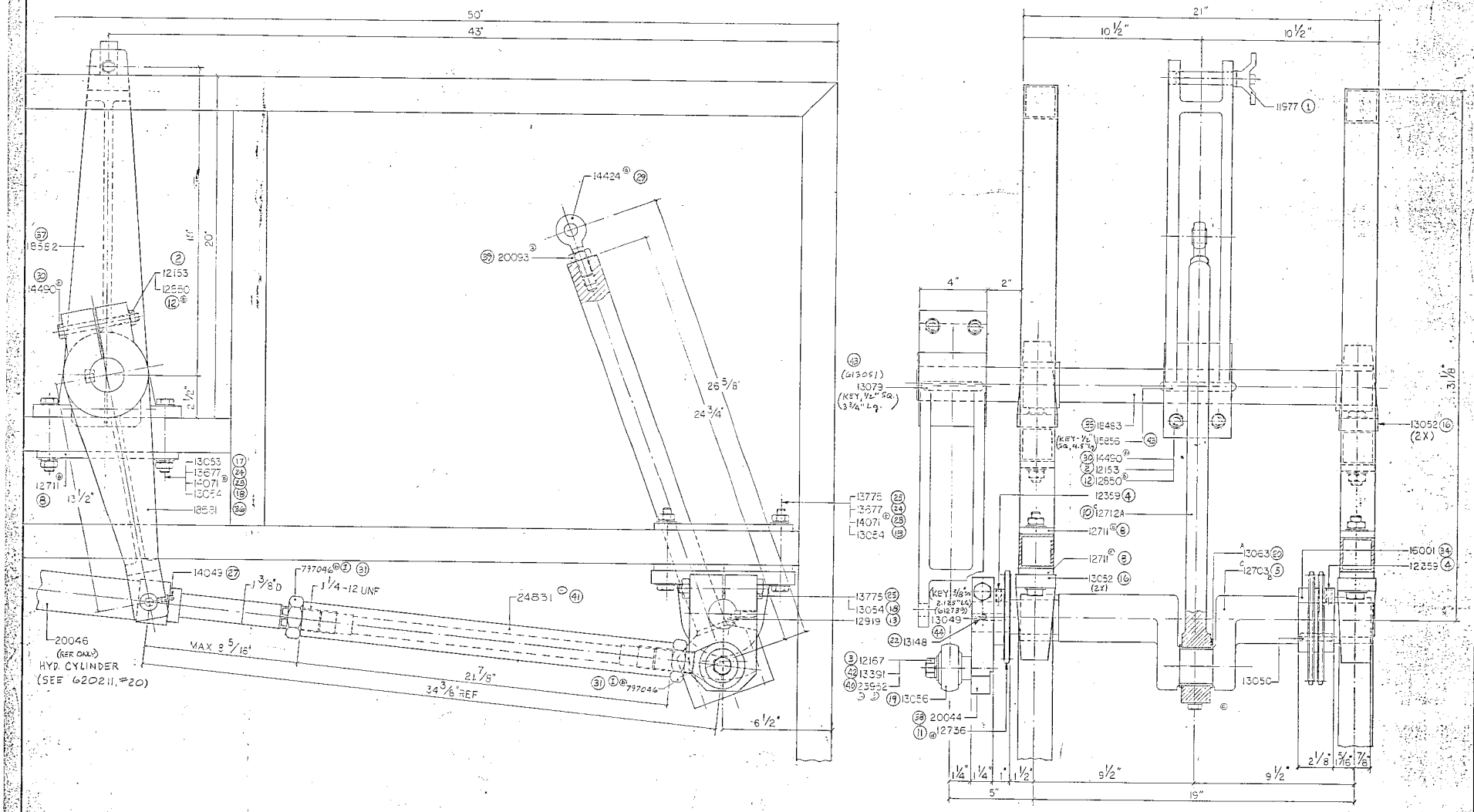

H	8-22-00				
G	110627	COMP. DWG NO.	QTY.	DESCRIPTION OF COMPONENT	MATL. SPEC. NO. / MATL.
F	110694	SCALE	1:2	2 POCKET DIVIDER POUNDER	
E	110285	DWN BY	Z.B.	CRANKSHAFT AND PIVOT ARM ASSY	
D	02485	DATE	9-22-81		
C	100482	CHK			
B	110385	APP			
A	103482				
A	130352				

UNLESS OTHERWISE SPECIFIED
BREAK SHARP CORNERS
FINISH ALL OVER
MACHINED SURFACES - 125 RMS

FRACTIONAL ± 1/64
MACHINING DECIMAL ± .005
TOLERANCES ANGULAR ± 1/2°
ALLOWANCE ± 1/64

ADAM EQUIPMENT CORP.
617 INDUSTRIAL WAY WEST
EATONTOWN, N.J. 07724

ITEM TYPE | DWG. NO. 17055
PARENT DWG. NO. 17056

THIS DRAWING IS THE PROPERTY OF ADAM EQUIPMENT CORP. AND IS SUBJECT TO RETURN ON OUR REQUEST. IT IS NOT TO BE REPRODUCED IN WHOLE OR PART OR USED FOR ANY PURPOSE WE RESERVE THE RIGHT TO MAKE DESIGN CHANGES/IMPROVEMENT CHANGES.

ADAMATIC (Item #63) INDENTED BILL DATE 8/08/01 TIME 16.33.56 PAGE 1 AMEF72

PARENT ITEM NO. 00617095

DESCRIPTION CRANKSHAFT&PIVOT ARM ASY ADR2 QTY 1 ITEM TYPE 1 LOW LEVEL 01

ENGR DRAW E17095 UNIT MEAS EA

STANDARD BATCH QUANTITY 1.000

RELATIVE LEVEL	SEQ NO.	COMPONENT ITEM NO.	DESCRIPTION	ENGINEERING DRAWING NUMBER	QUANTITY PER	ITEM UM	ITEM TYP	OPT NO.	FIRST OP SEQ	LT ADJ	EFFECTIVE DATES FROM	TO
1	0001	00611977	PIN SINGLE ACTION LG12ST2760		1.000	EA	4			.0		
1	0002	00612153	NUT HEX FINISHED 1/2-13 GR5 ZP		4.000	EA	4			.0		
1	0003	00612167	WASHER FLAT .375 USS ZP		1.000	EA	4			.0		
1	0004	00612359	SCREW SET HXSOC 5/16-18X0.750"		1.000	EA	4			.0		
1	0005	006127030000B	CRANKSHAFT ADR2	C12703	1.000	EA	1			.0		
.2	0001	00613043	CASTING CRANKSHAFT	CASTING	1.000	EA	3			.0		
1	0008	00612711	PLATE MT 8.250"L	A12711	4.000	EA	1			.0		
.2	0001	12039	CDF 0.375" X 2.000" C1018		2.752	FT	3			.0		
1	0010	006127120000A	ROD CONN BACKPOCKET ASS'Y	C12712A	1.000	EA	2			.0		
.2	0001	00613055	SCREW HXHD CAP 1/2-13X2.750"		2.000	EA	4			.0		
.2	0002	00617771	CAP BOTTOM CONN ROD ADR2 BKPKT	B17771	1.000	EA	2			.0		
..3	0001	00617772	CASTING ROD CONN BOTTOM CAP	CASTING	1.000	EA	3			.0		
.2	0003	00617963	ROD CONN BACKPOCKET ADR2	C17963	1.000	EA	2			.0		
..3	0001	00617962	CASTING ROD CONN BACKPOCKET	CASTING	1.000	EA	3			.0		
1	0011	00612736	SPROCKET 40B36 AS 1.750"KW&SS		1.000	EA	4			.0		
1	0012	00612850	WASHER SPLIT LOCK 1/2"ID ZP		4.000	EA	4			.0		
1	0013	00612919	FITTING GREASE 29610 STRAIGHT		1.000	EA	4			.0		
1	0016	00613052	BEARING PILLOW BLK NP 2.000"		4.000	EA	4			.0		
1	0017	00613053	SCREW HXHD CAP 5/8-11X4.000"		8.000	EA	4			.0		
1	0018	00613054	NUT HX 5/8-11 GR5 ZP		8.000	EA	4			.0		
1	0019	00613056	BEARING ROD END TRE-16N		1.000	EA	4			.0		
1	0020	00613063	BEARING SHELL 2.000"L	A13063(M)	1.000	EA	4			.0		
1	0022	00613148	SCREW SET HXSOC 3/8-16X0.750"		1.000	EA	4			.0		
1	0024	00613677	WASHER FLAT 0.625"ID ZP		16.000	EA	4			.0		
1	0025	00613775	SCREW HXHD CAP 5/8-11X4.500"		4.000	EA	4			.0		
1	0027	00614049	FITTING GREASE STR-SHT ALEMITE		1.000	EA	4			.0		
1	0028	00614071	WASHER SPLIT LOCK 5/8 ZP		8.000	EA	4			.0		
1	0029	00614424	BEARING ROD END TM-12N		1.000	EA	4			.0		
1	0030	00614490	SCREW HXSOC 1/2-13X4.000"		4.000	EA	4			.0		
1	0031	00797046	NUTJAM HEX 1 1/4-12 REWORK ADR	B797046(C)	2.000	EA	2			.0		
.2	0001	00614492	NUT JAM HX 1.25-12 ZP		2.000	EA	4			.0		
1	0032	00614664	WASHER FLAT SAE 0.437"IDX1 1/8		1.000	EA	4			.0		
1	0034	00616001	SPROCKET D40B45 AS 2.000"KW&SS		1.000	EA	4			.0		
1	0035	00618483	SHAFT PIVOT ARM 27.000"L	B18483	1.000	EA	1			.0		
.2	0001	13047	CFR 2.000" C1018		2.250	FT	3			.0		
1	0036	00618581	ARM PIVOT ADR2	C18581	1.000	EA	1			.0		
.2	0001	00620075	CASTING ARM PIVOT ADR2&4	(NO DWG.)	1.000	EA	3			.0		
1	0037	00618582	ARM MAIN PISTON ADR2	C18582	1.000	EA	1			.0		
.2	0001	00620074	CASTING ARM MAIN PISTON ADR4		1.000	EA	3			.0		
1	0038	00620044	PIVOT CRANKSHAFT WELDMENT ADR2	C2004400	1.000	EA	2			.0		
.2	0001	12378	CFR 1.250" C1018		.256	FT	3			.0		
.2	0002	13046	CDF 1.250X4.000" C1018		.521	FT	3			.0		
1	0039	00620093	NUT JAM HX 3/4-16		1.000	EA	4			.0		
1	0040	00623952	WASHER PIVOT CRKSHFT .250"L	A23952	1.000	EA	4			.0		
1	0041	00624831	ROD CONN PIVOT ARM 21.5"L	B24831 (M)	1.000	EA	2			.0		
.2	0001	13047	CFR 2.000" C1018		1.792	FT	3			.0		
1	0042	00613391	SCREW HXHD CAP 3/8-16X0.750"		1.000	EA	4			.0		

PARENT ITEM NO. 00617095
DESCRIPTION CRANKSHAFT&PIVOT ARM ASY ADR2
ENGR DRAW E17095
STANDARD BATCH QUANTITY 1.000
QTY 1 ITEM TYPE 1 LOW LEVEL 01
UNIT MEAS EA

RELATIVE LEVEL	SEQ NO.	COMPONENT ITEM NO.	DESCRIPTION	ENGINEERING DRAWING NUMBER	QUANTITY PER	ITEM UM	TYP	OPT NO.	FIRST OP SEQ	LT ADJ	EFFECTIVE DATES FROM	TO
1	0043	00613051	KEY STOCK 1/2 SQ CF C1035		.688	EA	4			.0		
1	0044	00612739	KEY STOCK 3/8 SQ CF C1035		.178	EA	4			.0		

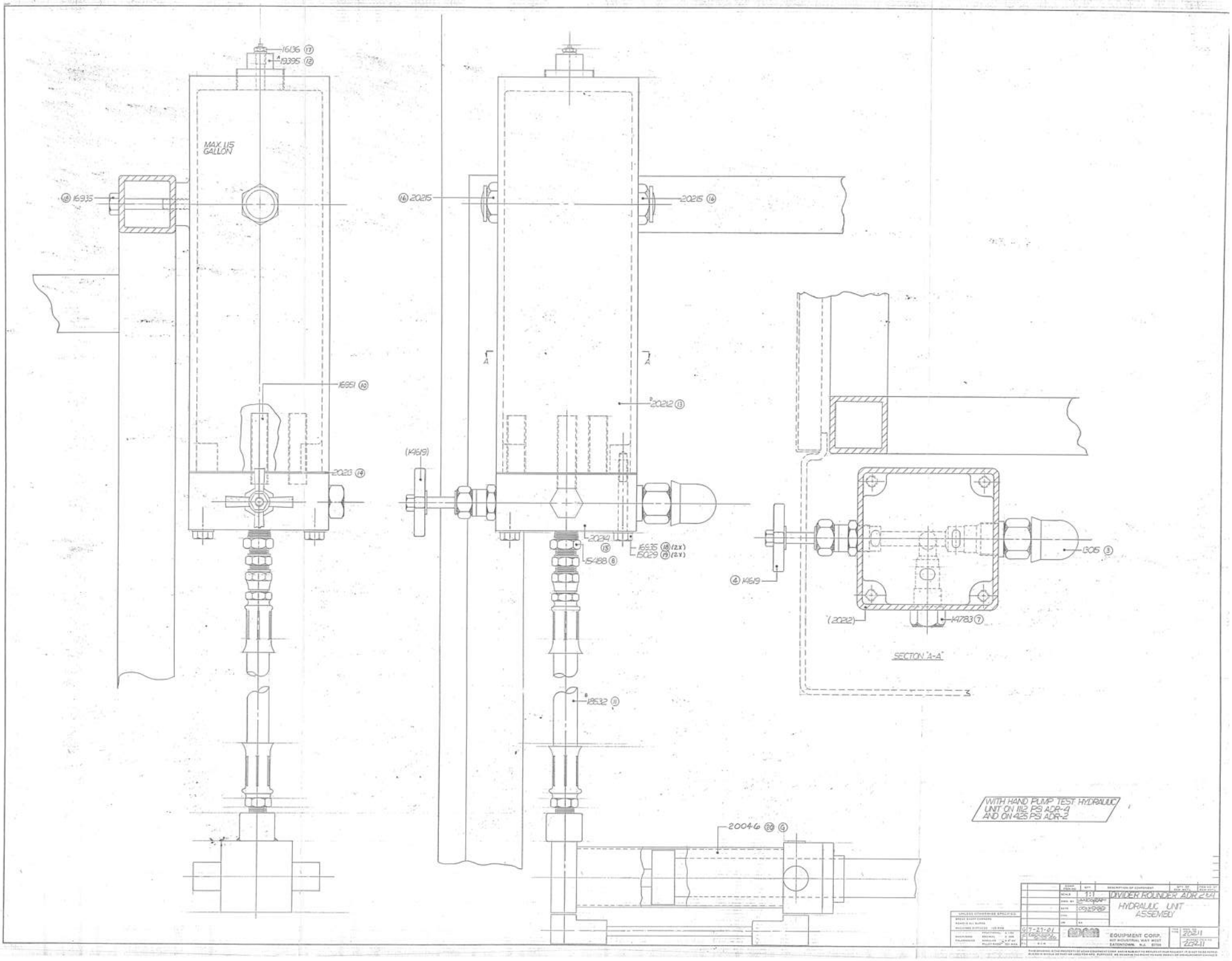
16136 (17)
19395 (12)
MAX 115 GALLON
(18) 16935
16951 (10)
2023 (14)
(16) 20215
20215 (16)
20212 (13)
(K1619)
20341 (15)
16935 (18) (2X)
15029 (19) (2X)
15488 (8)
18632 (11)
20046 (20) (4)
(4) K1619
1305 (3)
(2022)
K4783 (7)
SECTION "A-A"
WITH HAND PUMP TEST HYDRAULIC UNIT ON 1112 PSI ADR-4 AND ON 425 PSI ADR-2
DIVIDER FOUNDER ADR 2 & 4
HYDRAULIC UNIT ASSEMBLY
EQUIPMENT CORP.
801 INDUSTRIAL WAY WEST
EATONTOWN, N.J. 07724

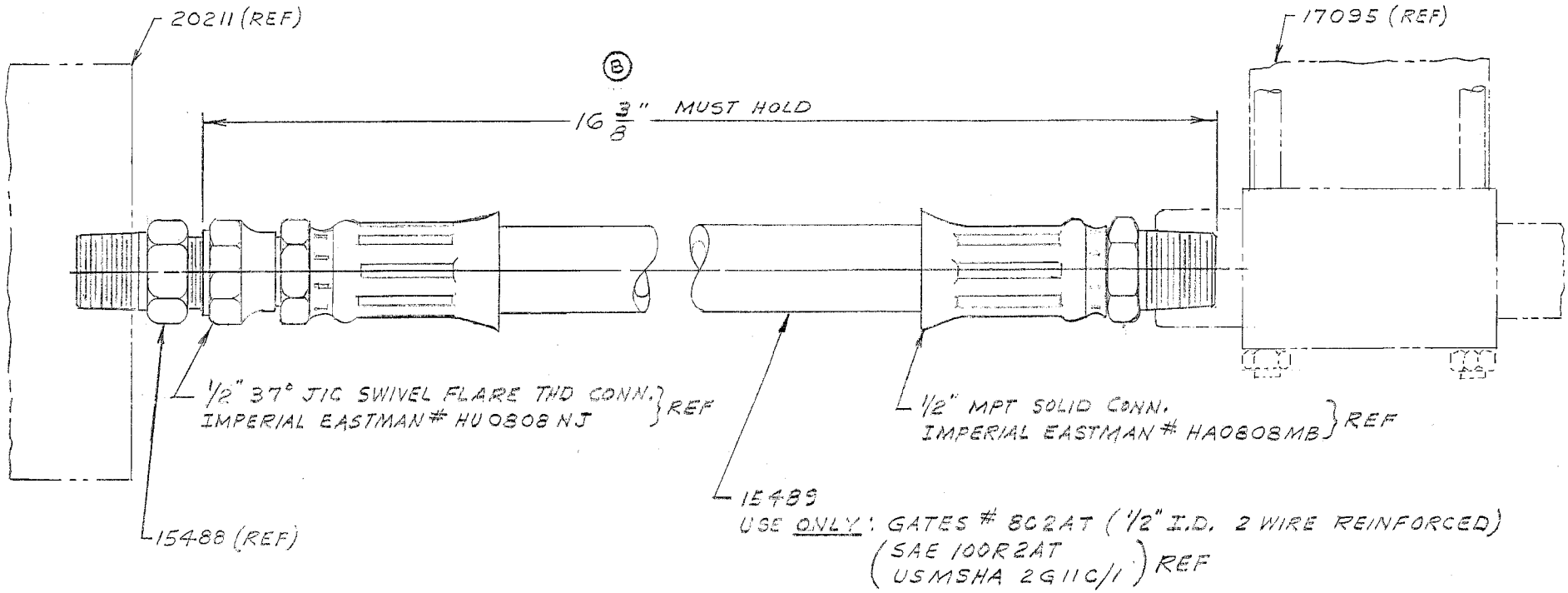

(PURCHASED ITEM)

COMP. ITEM NO.	QTY.	DESCRIPTION OF COMPONENT	QTY. OF RAW MAT'L.	ITEM NO. OF RAW MAT'L.

SCALE	1:1
DWN. BY	RWT
DATE	072385
CHK.	
UM	EA

ADR 2, ADR4.

HOSE, HYDRAULIC -ASS'Y

R.L.	E.C.N.
B	8/19/98
9	072485

ADAM

EQUIPMENT CORP.
607 INDUSTRIAL WAY WEST
EATONTOWN, N. J. 07724

ITEM TYPE

DWG. NO. 18532

PARENT ITEM NO. 18532

UNLESS OTHERWISE SPECIFIED

BREAK SHARP CORNERS
REMOVE ALL BURRS
MACHINED SURFACES 125 RMS

MACHINING TOLERANCES		
	FRACTIONAL	± 1/64
	DECIMAL	± .005
	ANGULAR	± 0°-30'
	FILLET RADII	.031 MAX.

USED ON HYD. UNIT ASSY: E 620211 (#11)

(MAIN ASSY # E 613233, #81)

THIS DRAWING IS THE PROPERTY OF ADAM EQUIPMENT CORP. AND IS SUBJECT TO RETURN AT OUR REQUEST. IT IS NOT TO BE REPRODUCED IN WHOLE OR PART OR USED FOR MFG. PURPOSES. WE RESERVE THE RIGHT TO MAKE DESIGN OR MEASUREMENT CHANGES.

ADAMATIC (Item#B1) INDENTED BILL DATE 8/08/01 TIME 16.34.09 PAGE 1 AMEF72

PARENT ITEM NO. 00620211

DESCRIPTION HYDRAULIC UNIT ASS'Y ADR 2&4 QTY 1 ITEM TYPE 1 LOW LEVEL 01

ENGR DRAW E620211 UNIT MEAS EA

STANDARD BATCH QUANTITY 1.000

RELATIVE LEVEL	SEQ NO.	COMPONENT ITEM NO.	DESCRIPTION	ENGINEERING DRAWING NUMBER	QUANTITY PER	ITEM UM	ITEM TYP	OPT NO.	FIRST OP SEQ	LT ADJ	EFFECTIVE DATES FROM	TO
1	0003	00613015	VALVE RELIEF DBDS6K1X/100		1.000	EA	4			.0		
1	0004	00614619	VALVE NEEDLE S-310-S3		1.000	EA	4			.0		
1	0007	00614783	VALVE CHECK CXEB-X-AV		1.000	EA	4			.0		
1	0008	00615488	ADAPTER JIC=MALE TO NPTF MALE		1.000	EA	4			.0		
1	0010	00616951	NIPPLE 3/8"NPT 2.5"L BRASS		3.000	EA	4			.0		
1	0011	00618532	HOSE HYDRAULIC ASS'Y ADR/2&4	B18532	1.000	EA	4			.0		
1	0012	00619395	PLUG SQ HD 1.25" NPT BRASS	A19395 (M)	1.000	EA	2			.0		
.2	0001	00689274	PLUG PIPE BRASS 1 1/4" HYDRO		1.000	EA	4			.0		
1	0013	00620212	RESERVOIR OIL ADR4	D620212 (C)	1.000	EA	1			.0		
.2	0001	00685162	VACUUM IMPREG I9V5M W/POLYESTR		1.000	EA	4			.0		
.2	0002	00620224	CASTING RESERVOIR OIL ADR4	CASTING	1.000	EA	3			.0		
1	0014	00620213	GASKET OIL RESERVOIR 5.00X5.00	B20213	1.000	EA	9			.0		
.2	0001	16531	SHEET 0.062"THK VEG FIBER #681		25.000	IN	3			.0		
1	0015	00620214	BOTTOM OIL RESERVOIR 5.000"L	C20214	1.000	EA	9			.0		
.2	0001	20219	ART 2.000X5.000" 6061-T6		.417	FT	3			.0		
1	0016	00620215	GAUGE CHECK LOBE SIGHT 1.000"		2.000	EA	4			.0		
1	0017	00616136	RELIEF FITTING #47200		1.000	EA	4			.0		
1	0018	00616935	SCREW HXHD CAP 3/8-16X2.500"		3.000	EA	4			.0		
1	0019	00615029	WASHER FLAT SAE 0.375"ID ZP		2.000	EA	4			.0		
1	0020	00620046	CYLINDER HYD ADR2&4 SHEFFER #		1.000	EA	4			.0		

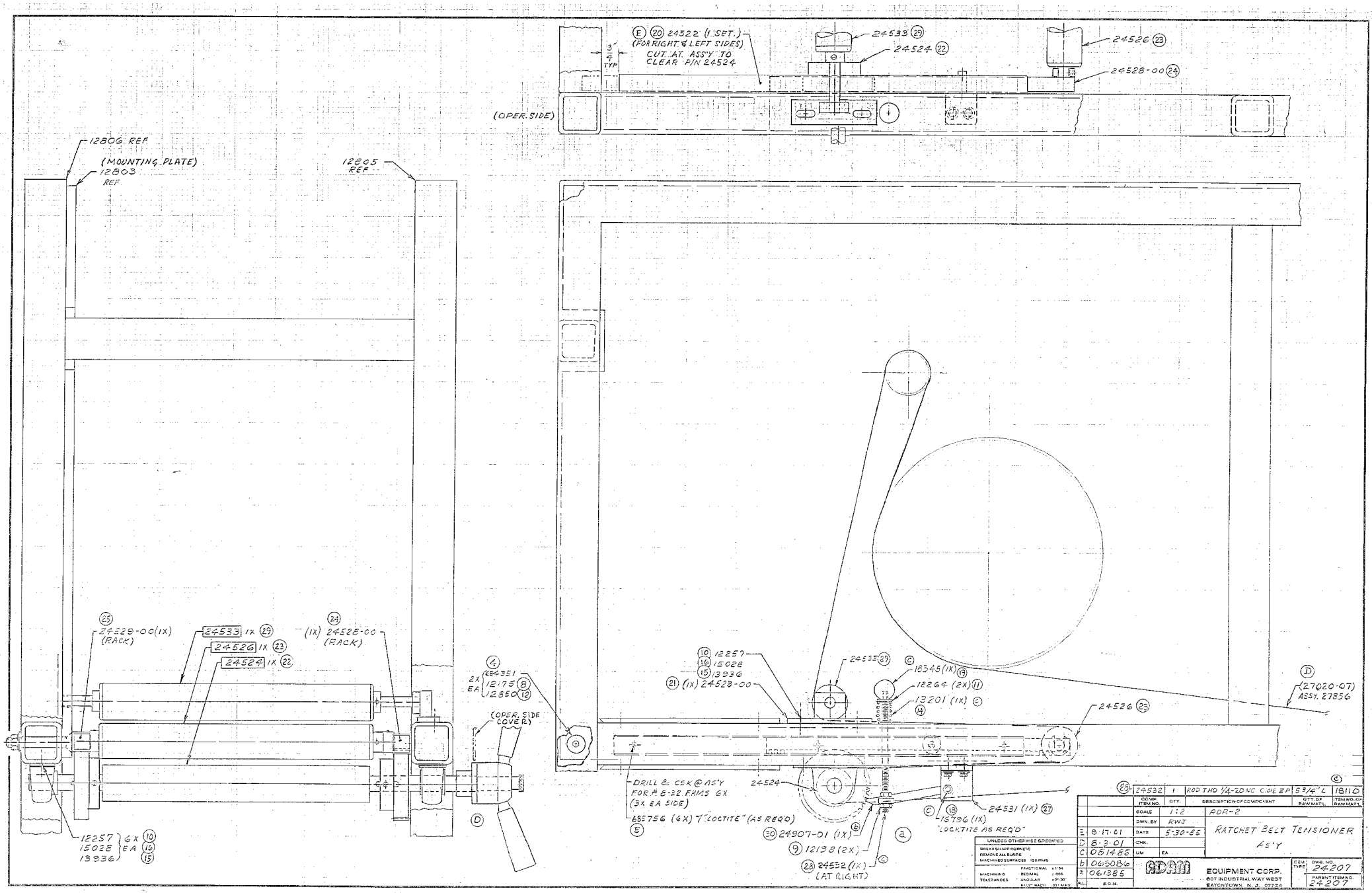

(23)	24532	1	ROD THD 1/4-20 NC C.O.E. ZP	5 3/4" L	18110
	COMP. ITEM NO.	QTY.	DESCRIPTION OF COMPONENT	QTY. OF RAW MAT'L	ITEM NO. OF RAW MAT'L

	SCALE	1:2	ADR-2
	DWN. BY	RWJ	RATCHET BELT TENSIONER ASS'Y
E	8-17-01	DATE	5-30-85
D	8-3-01	CHK.	
C	081486	UM	EA
b	063086		
a	061385		
R.L.	E.C.N.		

UNLESS OTHERWISE SPECIFIED
BREAK SHARP CORNERS
REMOVE ALL BURRS
MACHINED SURFACES 125 RMS

MACHINING TOLERANCES	FRACTIONAL	±1/64
	DECIMAL	±.005
	ANGULAR	±0°-30'
	SURFACE FINISH	250 MAX.

ADAM EQUIPMENT CORP.
607 INDUSTRIAL WAY WEST
EATONTOWN, N.J. 07724

ITEM TYPE | DWG. NO. 24207 | PARENT ITEM NO. 24207

THIS DRAWING IS THE PROPERTY OF ADAM EQUIPMENT CORP. AND IS SUBJECT TO RETURN AT OUR REQUEST. IT IS NOT TO BE REPRODUCED IN WHOLE OR PART OR USED FOR MFG. PURPOSES. WE RESERVE THE RIGHT TO MAKE DESIGN OR MEASUREMENT CHANGES.

ADAMATIC (Item # 83) INDENTED BILL

DATE 8/08/01 TIME 16.34.22 PAGE 1 AMEF72

PARENT ITEM NO. 00624207

DESCRIPTION RATCHET BELT TENSIONR ASY ADR2 QTY 1 ITEM TYPE 1 LOW LEVEL 01

ENGR DRAW D24207 UNIT MEAS EA

STANDARD BATCH QUANTITY 1.000

RELATIVE LEVEL	SEQ NO.	COMPONENT ITEM NO.	DESCRIPTION	ENGINEERING DRAWING NUMBER	QUANTITY PER	ITEM UM	ITEM TYP	OPT NO.	FIRST OP SEQ	LT ADJ	EFFECTIVE DATES FROM	TO
1	0003	00684350	KNOB BALL 1"D 1/4-20 #B-3		1.000	EA	4			.0		
1	0004	00684351	SCREW FH HXSOC 1/2-13X3.250"		2.000	EA	4			.0		
1	0005	00685756	SCREW FH HXSOC 8-32X0.375"		6.000	EA	4			.0		
1	0006	00686616	PIN ROLL 3/16 DIAX1.250"		1.000	EA	4			.0		
1	0008	00612175	WASHER FLAT 0.500"ID ZP		6.000	EA	4			.0		
1	0009	00612198	NUT HX 5/16-18 BR5 ZP		2.000	EA	4			.0		
1	0010	00612257	SCREW HXHD CAP 5/16-18X0.750"		6.000	EA	4			.0		
1	0011	00612264	WASHER FLAT USS 0.312" ID ZP		2.000	EA	4			.0		
1	0012	00612850	WASHER SPLIT LOCK 1/2"ID ZP		6.000	EA	4			.0		
1	0014	00613201	SPRING COMPRESS LC-038-E-13		1.000	EA	4			.0		
1	0015	00613936	WASHER SPLIT LOCK 3/4" ZP		6.000	EA	4			.0		
1	0016	00615028	WASHER FLAT SAE 0.312" ID ZP		6.000	EA	4			.0		
1	0018	00616796	SCREW SHOULDER HXSOC L= 0.750"		1.000	EA	4			.0		
1	0019	00618345	HANDLE BALL B-22		1.000	EA	4			.0		
1	0020	00624522	CHANNEL RACK RIGHT & LEFT SET	B624522	1.000	ST	4			.0		
1	0021	00624523	SUPPORT ROLLER WELDMENT	B2452300	1.000	EA	2			.0		
.2	0001	12098	CDF 0.250" X 1.250" C1018		.344	FT	3			.0		
.2	0002	15203	CDF 0.500X1.250" C1018		.105	FT	3			.0		
1	0022	00624524	ROLLER RATCHET ASY	C24524	1.000	EA	1			.0		
.2	0001	00624891	HUB HANDLE RATCHET ASS'Y	A624891(C)	1.000	EA	2			.0		
..3	0001	00624910	CFR 2.000X 1.000" LG C1018		1.000	EA	3			.0		
..3	0002	13194	CFR 0.250" C1018		.053	FT	3			.0		
.2	0002	00684349	GEAR SPUR S1240 0.750"KW&SS 14		2.000	EA	4			.0		
.2	0003	00610000	SCREW HXHD CAP 1/4-20X0.750"		4.000	EA	4			.0		
.2	0004	00612381	BEARING PILLOW BLK LFB 0.750"		2.000	EA	4			.0		
.2	0007	00612929	WASHER SPLIT LOCK 1/4" STL ZP		4.000	EA	4			.0		
.2	0008	00615027	WASHER FLAT SAE 0.250" STL ZP		4.000	EA	4			.0		
.2	0009	00794124	SHAFT BELT RATCHET ADR2	B794124 (C)	1.000	EA	2			.0		
..3	0001	13921	SR 0.750" SS 304		2.084	FT	3			.0		
.2	0010	00624771	TUBE ROLLER ASS'Y ADR2	A24771	1.000	EA	2			.0		
..3	0001	00684663	BEARING ROLL END CAT # 1416GS		2.000	EA	4			.0		
..3	0002	0062575001	TUBE ROLLER 12 5/8"L ADR 2	A2575001(M)	1.000	EA	2			.0		
...4	0001	06061	RMT 1.750X0.065" (16GA) C1010		1.053	FT	3			.0		
.2	0011	00612360	KEY STOCK 1/4 SQ CF C1035		.250	EA	4			.0		
.2	0012	0068144001	HANDLE & ADJ MECHANISM POS 72	B68144001 (C)	1.000	EA	2			.0		
.2	0013	00613184	KNOB KNURLED SKA-3		1.000	EA	4			.0		
1	0023	00624526	ROLLER TENSION ASS'Y ADR2	B24526 (M)	1.000	EA	2			.0		
.2	0001	00686060	BEARING ROLLER DELRIN 1.625"OD		2.000	EA	4			.0		
.2	0002	12245	CFR 0.500" C1018		1.204	FT	3			.0		
.2	0003	00619109	ROLLER IDLER L=13.000" TENSN	A19109	1.000	EA	2			.0		
..3	0001	06061	RMT 1.750X0.065" (16GA) C1010		1.083	FT	3			.0		
1	0024	00624528	RACK OPER SIDE WELDMENT	A2452800	1.000	EA	2			.0		
.2	0001	00612314	COLLAR ID 0.500 C-050		1.000	EA	4			.0		
.2	0002	00684346	GEAR RACK #RA12X6' 14 1/2		.990	FT	3			.0		
1	0025	00624529	RACK DRIVE SIDE WELDMENT	A2452900	1.000	EA	1			.0		
.2	0001	00684346	GEAR RACK #RA12X6' 14 1/2		.990	FT	3			.0		
.2	0002	00612314	COLLAR ID 0.500 C-050		1.000	EA	4			.0		

PARENT ITEM NO. 00624207

DESCRIPTION RATCHET BELT TENSIONR ASY ADR2
ENGR DRAW D24207
STANDARD BATCH QUANTITY 1.000

QTY 1 ITEM TYPE 1 LOW LEVEL 01
UNIT MEAS EA

RELATIVE LEVEL	SEQ NO.	COMPONENT ITEM NO.	DESCRIPTION	ENGINEERING DRAWING NUMBER	QUANTITY PER	UM	ITEM TYP	OPT NO.	FIRST OP SEQ	LT ADJ	EFFECTIVE DATES FROM	TO
1	0027	00624531	BRACKET PAWL 1.500"L	A24531	1.000	EA	1			.0		
.2	0001	15852	LB 1.500" X 1.500" X 0.250"		.105	FT	3			.0		
1	0028	00624532	ROD THD 1/4-20 L= 5.750"	A24532	1.000	EA	2			.0		
.2	0001	18110	ROD THD 1/4-20 ZP		.479	FT	3			.0		
1	0029	00624533	ROLLER IDLER ASS'Y	B24533	1.000	EA	2			.0		
.2	0001	00686060	BEARING ROLLER DELRIN 1.625"OD		2.000	EA	4			.0		
.2	0002	12245	CFR 0.500" C1018		1.500	FT	3			.0		
.2	0003	00612314	COLLAR ID 0.500 C-050		2.000	EA	4			.0		
.2	0004	00619109	ROLLER IDLER L=13.000" TENSN	A19109	1.000	EA	2			.0		
..3	0001	06061	RMT 1.750X0.065" (16GA) C1010		1.083	FT	3			.0		
1	0030	0062490701	PAWL RATCHET WELD ADR2	B2490701(C)ADR	1.000	EA	9			.0		
.2	0001	12091	CDF 0.500" X 0.750" C1018		.417	FT	3			.0		
.2	0002	12095	CDF 0.250" X 0.750" C1018		.126	FT	3			.0		

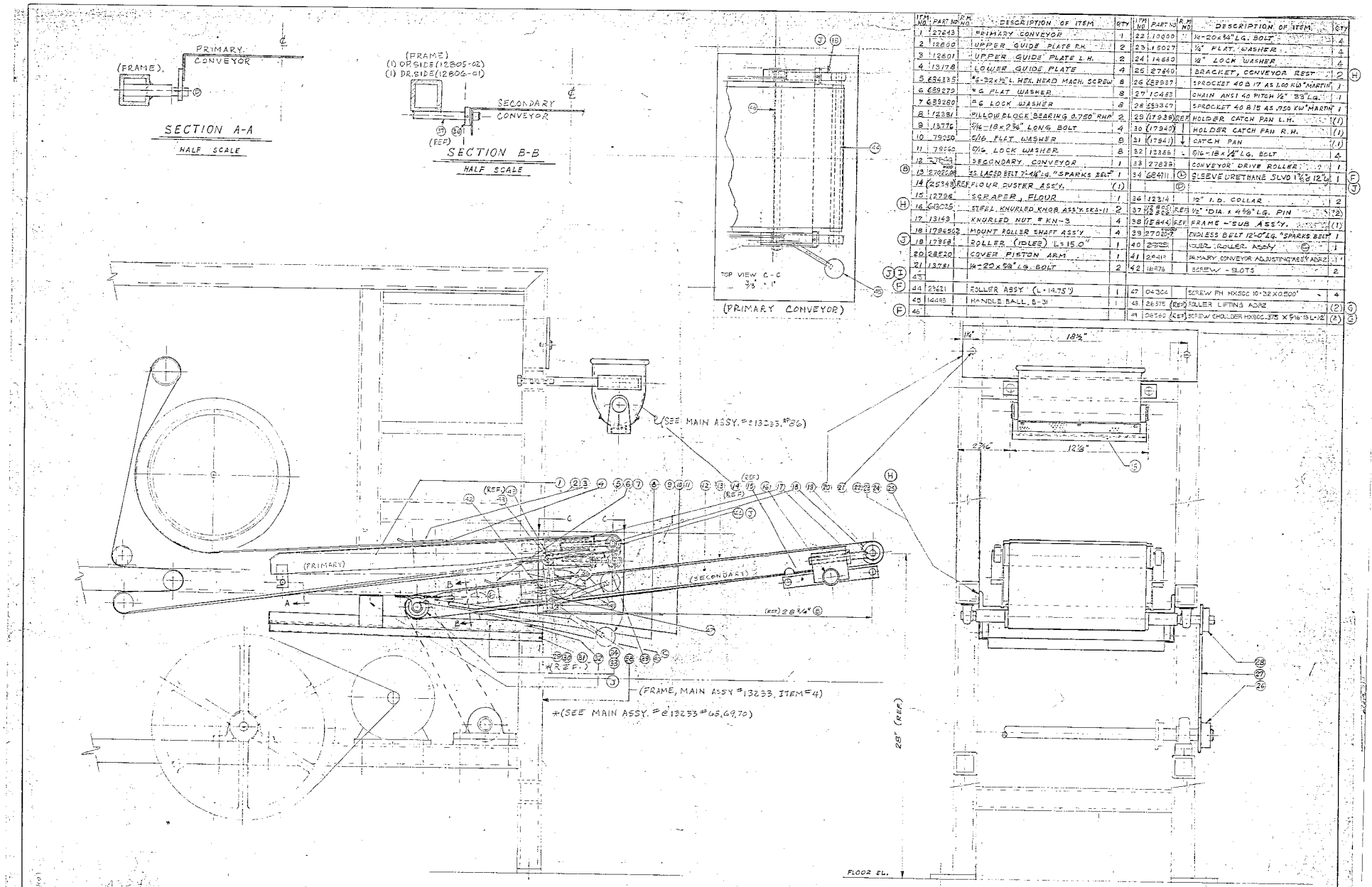

ITM NO	PART NO	R.M. NO	DESCRIPTION OF ITEM	QTY
1	27643		PRIMARY CONVEYOR	1
2	12800		UPPER GUIDE PLATE R.H.	2
3	12801		UPPER GUIDE PLATE L.H.	2
4	13178		LOWER GUIDE PLATE	4
5	689235		#8-32 x 1/2" L. HEX. HEAD MACH. SCREW	8
6	689279		#8 FLAT WASHER	8
7	689280		#8 LOCK WASHER	8
8	12381		PILLOW BLOCK BEARING 0.750" RHP	2
9	13776		5/16-18 x 2 3/4" LONG BOLT	4
10	79050		5/16 FLAT WASHER	8
11	79060		5/16 LOCK WASHER	8
12	27634		SECONDARY CONVEYOR	1
13	270228		#3 LACED BELT 7-1 1/4" LG. "SPARKS BELT"	1
14	(25343)	REF	FLOUR DUSTER ASS'Y.	(1)
15	(2736)		SCRAPER, FLOUR	1
16	CH3025		STEEL KNURLED KNOB ASS'Y. SKS-11	2
17	13143		KNURLED NUT #KN-3	4
18	17856502		MOUNT ROLLER SHAFT ASS'Y	4
19	17858		ROLLER (IDLER) L=15.0"	1
20	28520		COVER PISTON ARM	1
21	13781		1/4-20 x 5/8" LG. BOLT	2
43				
44	25621		ROLLER ASSY (L=14.75")	1
45	14445		HANDLE BALL, B-31	1
46				

ITM NO	PART NO	R.M. NO	DESCRIPTION OF ITEM	QTY
22	13000		1/4-20 x 3/4" LG. BOLT	4
23	15027		1/4" FLAT WASHER	4
24	14680		1/4" LOCK WASHER	4
25	27640		BRACKET, CONVEYOR REST	2
26	689237		SPROCKET 40 B 17 AS 1.00 KW "MARTIN"	1
27	10483		CHAIN ANSI 40 PITCH 1/2" 33" LG.	1
28	689347		SPROCKET 40 B 15 AS .750 KW "MARTIN"	1
29	(17936)	REF	HOLDER CATCH PAN L.H.	(1)
30	(17940)		HOLDER CATCH PAN R.H.	(1)
31	(17941)		CATCH PAN	(1)
32	13386		5/16-18 x 1/2" LG. BOLT	4
33	27839		CONVEYOR DRIVE ROLLER	1
34	68411		SLEEVE URETHANE SLVD 1 7/8 x 12"	1
36	12314		1/2" I.D. COLLAR	2
37	1/2 x 4 5/8	REF	1/2" DIA x 4 5/8" LG. PIN	(2)
38	(E844)	REF	FRAME - SUB ASS'Y.	(1)
39	270227		ENDLESS BELT 12'-0" LG. "SPARKS BELT"	1
40	27855		IDLER ROLLER ASSY	1
41	28419		PRIMARY CONVEYOR ADJUSTING ASS'Y ADR2	1
42	18876		SCREW - SLOTS	2
47	04304		SCREW FH HXSOC 10-32 X 0.500"	4
48	26375	(REF)	ROLLER LIFTING ADR2	(2)
49	08280	(REF)	SCREW SHOULDER HXSOC .375 X 5/16-18 L-12	(2)

J	3-05-02		
I	2-06-02		
H	9-24-91		
G	9-26-01	1/2"	ADR-2. SPLIT BELT
F	9-8-01	1 REV. L.	
E	02-16-90	4-7-1989	DUAL CONV. ASS'Y.
D	11-06-89		
C	10-10-89		
B	10-27-89		
A	09-13-89		ADRAM EQUIPMENT CORP. 867 INDUSTRIAL WAY SPUR, WATSONVILLE, CALIF. 95076

UNLESS OTHERWISE SPECIFIED

27856

ADAMATIC

INDENTED BILL

DATE 3/05/02 TIME 10.07.33 PAGE 1 AMEF72

PARENT ITEM NO. 00627856
DESCRIPTION DUAL CONVEYOR ASS'Y ADR-2
ENGR DRAW E27856
STANDARD BATCH QUANTITY 1.000
QTY 1 ITEM TYPE 2 LOW LEVEL 01
UNIT MEAS EA

RELATIVE LEVEL	SEQ NO.	COMPONENT ITEM NO.	DESCRIPTION	ENGINEERING DRAWING NUMBER	QUANTITY PER	ITEM UM	TYP	OPT NO.	FIRST OP SEQ	LT ADJ	EFFECTIVE DATES FROM	TO
1	0001	00627843	PRIMARY CONVY BD/ADR2 SPLT BLT	D627843 (C)	1.000	EA	4			.0		
1	0002	00612800	PLATE GUIDE UPPER RH ADR,VDR.	A612800 (C)	2.000	EA	9			.0		
.2	0001	12319	SS 0.075" (14GA) 304 #2B		.826	LB	3			.0		
1	0003	00612801	PLATE GUIDE UPPER LH ADR,VDR.	A612801 (C)	2.000	EA	4			.0		
1	0004	00613178	PLATE GUIDE LOWER 3.000"L	A613178(C)	4.000	EA	1			.0		
.2	0001	00796800	SR 0.188" X 3" SS 304		.128	FT	3			.0		
1	0005	00684335	SCREW HXHD CAP 6-32X0.500"		8.000	EA	4			.0		
1	0006	00689279	WASHER FLAT NR 6 ZP		8.000	EA	4			.0		
1	0007	00689280	WASHER LOCK NR 6 ZP		8.000	EA	4			.0		
1	0008	00612381	BEARING PILLOW BLK LPB 0.750"		2.000	EA	4			.0		
1	0009	00613776	SCREW HXHD CAP 5/16-18X2.750"		4.000	EA	4			.0		
1	0010	00679050	WASHER FLAT PL 5/16"ST		8.000	EA	9			.0		
1	0011	00679060	WASHER LOCK PL 5/16" ST		8.000	EA	9			.0		
1	0012	00627844	SECONDARY CONVEYOR ADR2	C27844	1.000	EA	2			.0		
.2	0001	12927	CRS 0.075" (14GA)		4.269	LB	3			.0		
.2	0002	13165	CDF 1.000X2.500" C1018		.500	FT	3			.0		
1	0013	0062702000008	BELT SS LACED 7'4.25"X12"W		1.000	EA	4			.0		
1	0015	00612798	SCRAPER FLOUR SUB ASS'Y	C12798	1.000	EA	9			.0		
.2	0001	00613172	PLATE SIDE L= 8.250"	A13172	2.000	EA	2			.0		
.3	0001	12156	CDF 0.500X1.000" C1018		1.374	FT	3			.0		
.2	0002	00613173	SR 0.500X16.000"	C12798	2.000	EA	1			.0		
.3	0001	13174	SR 0.500" 303S (AN-CD)		5.334	FT	3			.0		
1	0016	00613025	KNOB ASY SKA-11		2.000	EA	4			.0		
1	0017	00613143	NUT KNURLED KN 3		4.000	EA	4			.0		
1	0018	0061796502	MOUNT ROLLER SHAFT DISCHARGE	A61796502(C)	4.000	EA	2			.0		
.2	0001	00796001	COLLAR SHAFT SS .5" BORE 1" OD		4.000	EA	4			.0		
.2	0002	00795999	ROD THD 5/8-11 SS 18-8 COARSE		1.336	FT	3			.0		
1	0019	00617958	ROLLR 1.419.A49.W49 RL=13.250"	B17958	1.000	EA	4			.0		
1	0020	00628520	COVER PISTON ARM	B28520	1.000	EA	4			.0		
1	0021	00613781	SCREW HXHD CAP 1/4-20X0.625"		2.000	EA	4			.0		
1	0022	00610000	SCREW HXHD CAP 1/4-20X0.750"		4.000	EA	4			.0		
1	0023	00615027	WASHER FLAT SAE 0.250" STL ZP		4.000	EA	4			.0		
1	0024	00614680	WASHER LOCK 0.250 ID ZP		4.000	EA	4			.0		
1	0025	00627840	BRACKET CONVEYOR REST	B27840 (M)	2.000	EA	2			.0		
.2	0001	15974	LB 2.500X1.500X0.250" A36		8.000	FT	3			.0		
1	0026	00689937	SPROCKET 40BS17HT 1.000"KW		1.000	EA	4			.0		
1	0027	00610483	CHAIN ANSI 40 RIV 1/2"		2.750	FT	4			.0		
1	0028	00689367	SPROCKET 40BS15HT 0.750"KW&SS		1.000	EA	4			.0		
1	0032	00613388	SCREW HXHD CAP 5/16-18X0.500"		4.000	EA	4			.0		
1	0033	00627839	CONVEY DRV ROLL/ADR2 SPLT BELT	B27839	1.000	EA	2			.0		
.2	0001	13047	CFR 2.000" C1018		1.910	FT	3			.0		
1	0034	00684711	SLEEVE URETHANE SLVO 1.075"		1.000	EA	4			.0		
1	0036	00612314	COLLAR ID 0.500 C-050		2.000	EA	4			.0		
1	0039	0062702000007	BELT ENDL 12' L X 12" W		1.000	EA	4			.0		
1	0040	29281	IDLER ROLLER ASSEMBLY	B29281	1.000	EA	2			.0		
.2	0001	29280	SHAFT CONVEYOR IDLER	B29280	1.000	EA	9			.0		
.3	0001	12245	CFR 0.500" C1018		1.104	FT	3			.0		

PARENT ITEM NO. 00627856 DESCRIPTION DUAL CONVEYOR ASS'Y ADR-2 QTY 1 ITEM TYPE 2 LOW LEVEL 01
ENGR DRAW E27856 UNIT MEAS EA
STANDARD BATCH QUANTITY 1.000

RELATIVE LEVEL	SEQ NO.	COMPONENT ITEM NO.	DESCRIPTION	ENGINEERING DRAWING NUMBER	QUANTITY PER	ITEM UM	TYP	OPT NO.	FIRST OP SEQ	LT ADJ	EFFECTIVE DATES FROM	TO
.2	0002	00612314	COLLAR ID 0.500 C-050		2.000	EA	4			.0		
.2	0003	00619711	ROLLER BELT RETURN 2.000"L	A19711	2.000	EA	2			.0		
..3	0001	19712	UHMW POLYETHYLENE 1.750" DIA		.334	FT	3			.0		
.2	0004	00615027	WASHER FLAT SAE 0.250" STL ZP		1.000	EA	4			.0		
.2	0005	00614680	WASHER LOCK 0.250 ID ZP		1.000	EA	4			.0		
.2	0006	00613783	SCREW HXHD CAP 1/4-20X0.875"		1.000	EA	4			.0		
1	0041	29419	PRIMARY CONVEYOR ADJUST. ASSY.	C29419 (M)	1.000	EA	1			.0		
.2	0001	29413	ADJUSTING BRACKET WLDMT. ADR2	B29413 (M)	1.000	EA	2			.0		
..3	0001	12883	CDF 0.125X1.000" C1018		.396	FT	3			.0		
..3	0002	12112	CFR 1.000" C1018		.042	FT	3			.0		
.2	0002	00686560	SCREW SHOULDER HXSOC L= 0.500"		2.000	EA	4			.0		
.2	0003	00626878	SHAFT 5/8 DIA X 16.5 LG C1018	C29419,#3	1.000	EA	2			.0		
..3	0001	12282	CFR 0.625" C1018		1.292	FT	3			.0		
.2	0004	00626876	HANDLE ADJ. BRACKET WLDMNT ADR	C26876 (M)	1.000	EA	2			.0		
..3	0001	12883	CDF 0.125X1.000" C1018		.396	FT	3			.0		
..3	0002	12112	CFR 1.000" C1018		.084	FT	3			.0		
..3	0003	12148	CFR 0.375" C1018		.417	FT	3			.0		
.2	0005	00689302	BUSHING BEARING EF703-07		2.000	EA	4			.0		
.2	0006	29412	MOUNTING BRACKET	B29412	2.000	EA	1			.0		
..3	0001	12583	CDF 0.125X1.000" C1018		.416	FT	3			.0		
.2	0007	00614478	HANDLE BALL B-31		1.000	EA	4			.0		
.2	0008	00626875	ROLLER LIFTING PRIM.CONVYR.ADR	A26875 (M)	2.000	EA	2			.0		
..3	0001	04905	DELRIN ROUND 1.125"		.116	FT	3			.0		
.2	0009	00617002	PIN ROLL 3/16 DIAX1.000"		2.000	EA	4			.0		
1	0042	00616776	RIVET FH 3/16DIAX7/8 LONG		2.000	EA	4			.0		
1	0044	00629621	ROLLER ASS'Y PRIM CONV ADR2	B29621	1.000	EA	1			.0		
.2	0001	12248	CFR 0.500" C1018		1.250	FT	3			.0		
.2	0002	00629619	RMT 1.000X.048 (18GA) C1018		1.042	FT	3			.0		
.2	0003	00629620	BEARING ROLL END 818D .5 DELRN		2.000	EA	4			.0		
1	0045	00614478	HANDLE BALL B-31		1.000	EA	4			.0		
1	0047	00684304	SCREW FH HXSOC 10-32X0.500"		4.000	EA	4			.0		
1	0050	00612153	NUT HEX FINISHED 1/2-13 GR5 ZP		2.000	EA	4			.0		
1	0051	00612848	RING RETAINING 5108-75-S-PP		2.000	EA	4			.0		

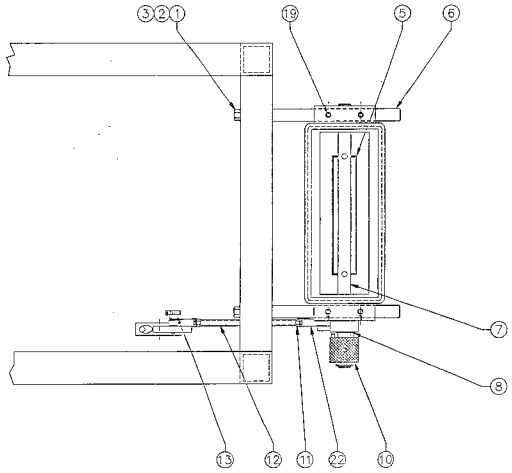

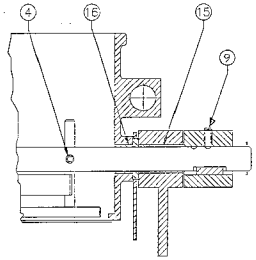

SECTION A–A

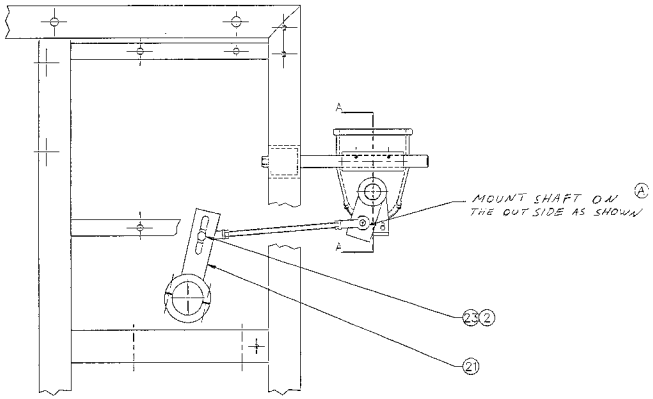

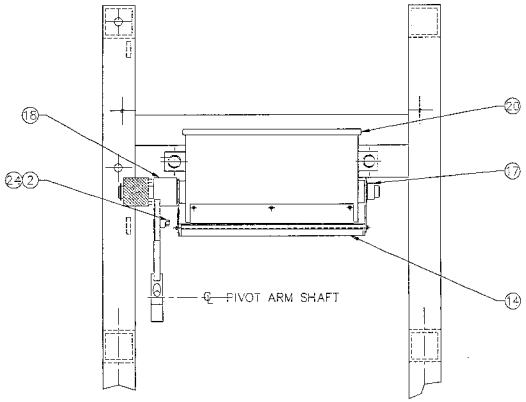

OPERATOR SIDE

DRIVE SIDE

POS.	PART NO.	R/M NO.	DESCRIPTION	QTY.
24	613182		SCREW HXHD CAP 3/8–16 X 3/4"	1
23	612437		SCREW CARRIAGE 3/8–16 X 1.250"	1
22	612282		BEARING ROD END	2
21	A 625345C6		LEVER PIVOT WELDMENT ADR–2 DUSTER	1
20	C 61[illegible]74		FLOUR DUSTER ADR 2–4	1
19	613037		SCREW SET 5/16–18 X 1/4"	4
18	A 625344		LEVER DRIVE FLOUR DUSTER	1
17	610823		COLLAR 3/4" ID	1
16	612428		BEARING BEARING 3/4" BORE	2
15	612427		BUSHING BEARING 3/4" BORE	1
14	C 625338		FLOUR DUSTER ADJUSTMENT	1
13	612433		KNOB KNURLED GK–10	1
12	B 612774		ROD CONNECTING DUSTER L=8.250"	1
11	612135		NUT HEX 1/4–20	2
10	A 612430		KNOB ENGAGEMENT	1
9	612669		PLUNGER BALL	1
8	612643		RING RETAINING	2
7	B 612402		SHAFT FLOUR DUSTER	1
6	A 625332		ROD MOUNT FLOUR DUSTER	2
5	A 6124330		DIVIDER FLOUR WELDMENT	1
4	684549		SCREW SET 1/4–20 X 1/4"	2
3	614070		WASHER LOCK 3/8" ID	2
2	612167		WASHER FLAT 3/8" ID	2
1	613661		SCREW HXHD CAP 3/8–16 X 3"	2

BILL OF MATERIALS

MACHINING TOLERANCES
FRACTIONAL: X/X ±1/64"
DECIMAL: X.X ±0.025"
X.XX ±0.015"
X.XXX ±0.005"
ANGULAR: X° ±0.5°
BREAK SHARP CORNERS
REMOVE ALL BURRS
MACHINED SURFACES 63 RMS

SCALE	1:4	ADR–2
DSN BY	RWJ	FLOUR DUSTER ASS'Y (EXTERNAL)
DWN BY	A. LAMKIN	
DATE	3/16/94	
CHK		
A 11-17-07		
REV	DATE	

ADAMATIC COMPANY
607 INDUSTRIAL WAY WEST, EATONTOWN, NJ 07724

SIZE D | DRAWING NO. 625343 | SHEET 1/1

ADAMATIC (Item #86)

INDENTED BILL

DATE 8/08/01 TIME 16.34.37 PAGE 1 AMEF72

PARENT ITEM NO.
00625343

DESCRIPTION DUSTER FLOUR ASY ADR2 (EXTERNAL)
ENGR DRAW D25343
STANDARD BATCH QUANTITY 1.000

QTY 1 ITEM TYPE 1 LOW LEVEL 02
UNIT MEAS EA

RELATIVE LEVEL	SEQ NO.	COMPONENT ITEM NO.	DESCRIPTION	ENGINEERING DRAWING NUMBER	QUANTITY PER	ITEM UM	ITEM TYP	OPT NO.	FIRST OP SEQ	LT ADJ	EFFECTIVE DATES FROM	TO
1	0001	00613881	SCREW HXHD CAP 3/8-16X3.000"		2.000	EA	4			.0		
1	0002	00612167	WASHER FLAT .375 USS ZP		2.000	EA	4			.0		
1	0003	00614070	WASHER SPLIT LOCK 3/8 ZP		2.000	EA	4			.0		
1	0004	00684549	SCREW SET HXSOC 1/4-20X0.250"		2.000	EA	4			.0		
1	0005	00612423	WELDMENT DIVIDER FLOUR	A12423	1.000	EA	4			.0		
1	0006	00625352	ROD MOUNT FLOUR DSTR 8.000"L	A25352	2.000	EA	1			.0		
.2	0001	13921	SR 0.750" SS 304		1.334	FT	3			.0		
1	0007	00612422	SHAFT FLOUR DUSTER 16.250"L	B12422 (M)	1.000	EA	2			.0		
.2	0001	13921	SR 0.750" SS 304		1.355	FT	3			.0		
1	0008	00612848	RING RETAINING 5108-75 S-PP		2.000	EA	4			.0		
1	0009	00615850	PLUNGER BALL W-18-N		1.000	EA	4			.0		
1	0010	00612420	KNOB ENGAGEMENT 1.500"L	A12420	1.000	EA	4			.0		
1	0011	00612135	NUT HEX 1/4-20 FINISHED STL ZP		2.000	EA	4			.0		
1	0012	00612774	CONN ROD FLOUR DUSTER DRIVE	B12774	1.000	EA	2			.0		
.2	0001	12287	ROD THD 3/8-24 ZP		.771	FT	3			.0		
1	0013	00612432	KNOB KNURLED DK-10		1.000	EA	4			.0		
1	0014	00628538	FLOUR DUSTR ADJ ADR2 SPLIT BLT	C28538	1.000	EA	9			.0		
.2	0001	00628827	COVER BOTTOM ADR2 FLOUR DUSTR	B28827 (M)	1.000	EA	3			.0		
.2	0002	00628822	PLATE SIDE ADR2 FLOUR DUSTER	A28822	2.000	EA	3			.0		
.2	0003	00628821	SUPPORT ROLLER ADR2 FLOUR DSTR	B28821 (M)	2.000	EA	2			.0		
.3	0001	06347	SS 0.075" (14GA) 304 #3 FINISH PAPER COV 1SD		.072	LB	3			.0		
.2	0004	00617266	SCREW HXHD CAP 10-24X0.500"		4.000	EA	4			.0		
.2	0005	00617225	WASHER FLAT NR 10 ZP		4.000	EA	4			.0		
.2	0006	00685774	WASHER LOCK NR 10 ZP		4.000	EA	4			.0		
1	0015	00612427	BUSHING BEARING CB 1216-11		1.000	EA	4			.0		
1	0016	00612428	BUSHING BEARING FL 77-8 NL		2.000	EA	4			.0		
1	0017	00610623	COLLAR ID 0.750 C-075		1.000	EA	4			.0		
1	0018	00625344	LEVER DRIVE ADR2 FLOUR DUSTER	A25344	1.000	EA	1			.0		
.2	0001	0062100100022	CASTING LEVER DRIVE	CASTING	1.000	EA	3			.0		
.2	0003	12421	CFR 1.750" C1018		.115	FT	3			.0		
.2	0004	18473	CDF 0.313X1.500" C1018		.219	FT	3			.0		
1	0019	00613037	SCREW SET HXSOC 5/16-18X0.250"		4.000	EA	4			.0		
1	0020	00612414	DUSTER FLOUR ADR2 & 4	C12414	1.000	EA	2			.0		
.2	0001	00612415	CASTING DUSTER FLOUR	CASTING	1.000	EA	3			.0		
.2	0002	00684389	SCREW RH SLOTT 8-32X0.250" SS		6.000	EA	4			.0		
.2	0003	00612429	PLATE BOTTOM DUST	A12429	1.000	EA	3			.0		
1	0021	00625345	LEVER PIVOT WELDMENT ADR2 DSTR	A2534500	1.000	EA	1			.0		
.2	0001	00684496	COLLAR SPLIT ID 2.000 2-PIECE		1.000	EA	9			.0		
.2	0002	12273	CDF 0.375" X 1.500" C1018		.354	FT	3			.0		
1	0022	00612282	BEARING ROD END HF-6C (CFHB 6)		2.000	EA	4			.0		
1	0023	00612431	SCREW CARRIAGE 3/8-16X1.250"		1.000	EA	4			.0		
1	0024	00613182	SCREW SHOULDER HXSOC L= 0.750"		1.000	EA	4			.0		
1	0025	00612166	NUT HEX 3/8-16 BR5 ZP		1.000	EA	4			.0		
1	0026	00612410	SCREW SET HXSOC 1/4-20X0.250"		2.000	EA	4			.0		

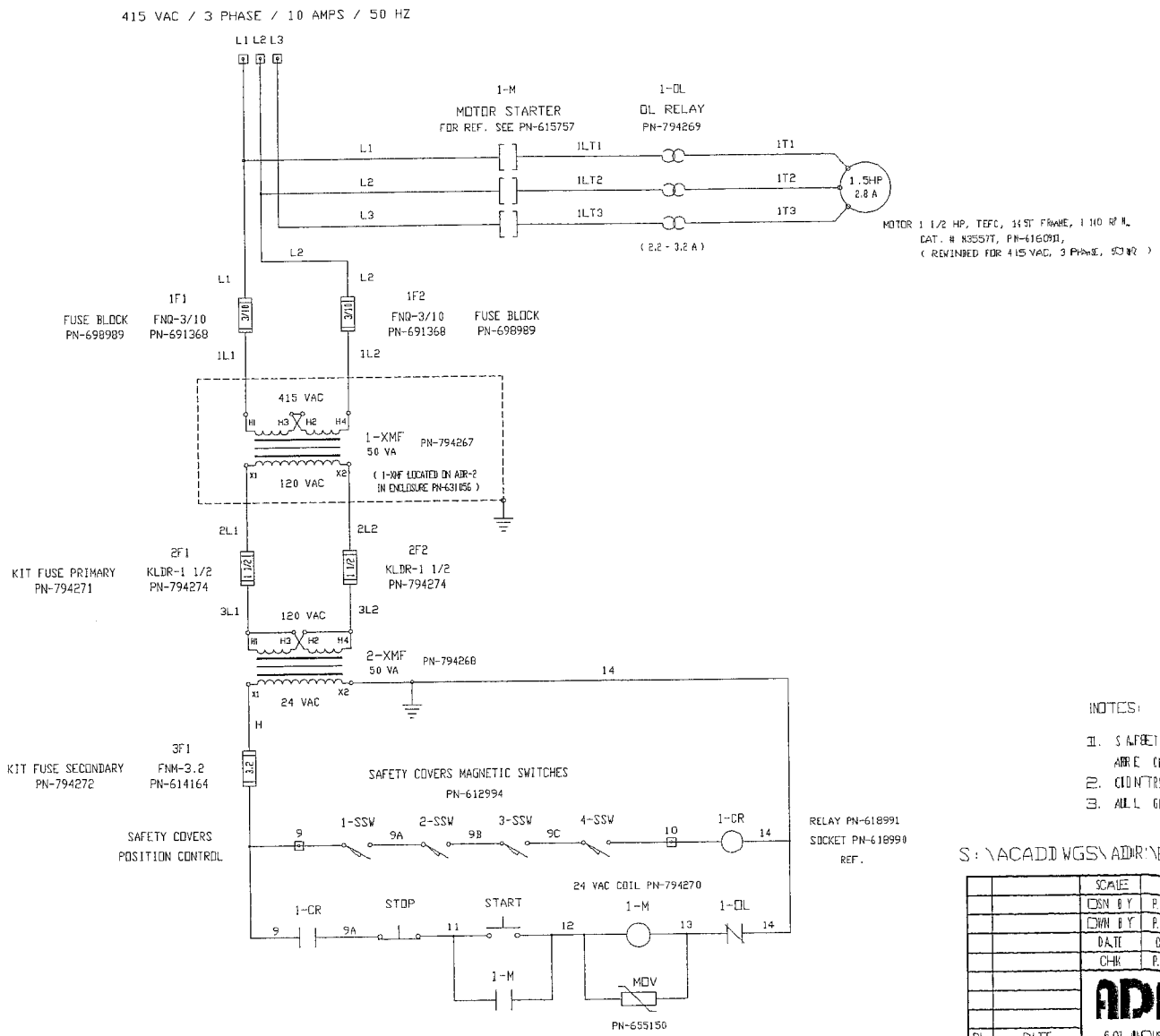

NOTES:

1. SAFETY MAGNETIC SWITCHES PN-612994 ARE CLOSED WHEN COVERS ARE CLOSED.
2. CONTROL PANEL PN-615757.
3. ALL GROUND POINTS ARE EARTH GROUND.

S:\ACADDWGS\ADDR\ELECTRIC\ADR-2\

		SCALE	NUL	415 VAC
		DSN BY	P.K. CONVERSKY	ADR-2
		DWN BY	P.K. CONVERSKY	ELECTRICAL SCHEMATIC
		DATE	04-11-95	
		CHK	P.K. CONVERSKY	
RL	DATE	ADAMATIC COMPANY 607 INDUSTRIAL WAY WEST, EATONTOWN, NJ 07724	SHEET SIZE B	DRAWING NO. 61883002 SHEET: 1/1